Model 267/267MR

Pressure Transducer

Applications

- Heating, Ventilating and Air-Conditioning (HVAC)
- Energy Management Systems
- Static Duct Pressure
- Clean Room Pressure
- Oven Pressurization and Furnace Draft Controls

Features

- Model 267MR Offers Multi-Range Capability, 6 Field Selectable Ranges via Dip Switches, and Field Selectable 0-5 or 0-10 VDC Output
- Model 267 Offers an Optional 3 1/2 Digit LCD Display with a 0.5% FS Standard Accuracy NEW
- NEMA 4/IP65 Rated Housing
- Optional Accuracies as High as 0.25% FS
- 24 VAC or 24 VDC Excitation
- PG-9, PG13.5 or Conduit Electrical Termination
- Integral Static Pressure Probe NEW
- Ranges as low as 0.1 in. W.C. (25 Pa)
- Meets CE Conformance Standards

ISO 9001 Certified

Visit Setra Online:
http://www.setra.com

setra

800-257-3872

Setra Systems Model 267 and 267MR pressure transducers sense gauge (static) or differential pressure and convert this pressure difference to a proportional electrical output. The 267 series is offered with a high level voltage output or 4-20 mA current output. The 267MR offers multi-range capability and field configurable 0-5 VDC or 0-10 VDC output, as well as a 4-20 mA output. The 267 is a single range unit and offers an optional LCD display. The 267 series has an IP65/NEMA 4 rated package to withstand environmental effects.

The 267 Series is available with an optional integral static pressure probe. Installation is quick and easy by mounting this version directly onto the duct. The 0.25" diameter pressure probe is made of sturdy extruded aluminum and is designed with baffles to prevent any velocity pressure errors.

Used in Building Energy Management Systems, the 267 and 267MR pressure transducers are available for air pressure ranges as low as 0.1 in W.C. (25 Pa) full scale to 100 in. W.C. (25 kPa) full scale. Static accuracy is ±1% full scale in normal ambient temperature environments.

The 267 series utilizes an improved all stainless steel micro-tig welded sensor, which is enclosed in a welded stainless steel body. The tensioned stainless steel diaphragm and insulated stainless steel electrode, positioned close to the diaphragm, form a variable capacitor. As the pressure increases or decreases, the capacitance changes. The change in capacitance is detected and converted to a linear DC electrical signal by Setra's unique electronic circuit.

The micro-tig welded tension sensor allows up to 10 psi overpressure (in either direction), with no damage to the unit. The improved sensor design also allows the Model 267MR version to have 6 field selectable pressure ranges (bi-directional and unidirectional) in one unit. The simple flip of a dip switch enables the user to easily field calibrate the unit with minimal effort.

NOTE: Setra quality standards including ISO 9001 are based on ANSI-Z540-1. The calibration of this product is NIST traceable. U.S. Patent Nos. 4358814, 4434203, 4054833, 6019002, 6014800 and other patents pending.

Outline Drawings

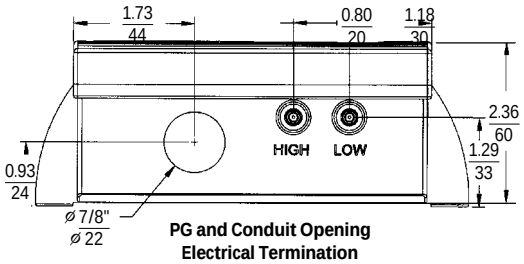

PG and Conduit Opening Electrical Termination

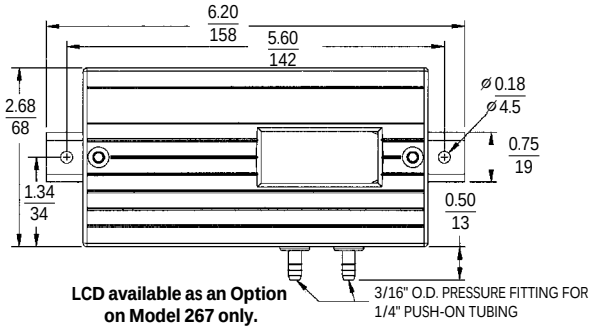

LCD available as an Option on Model 267 only.

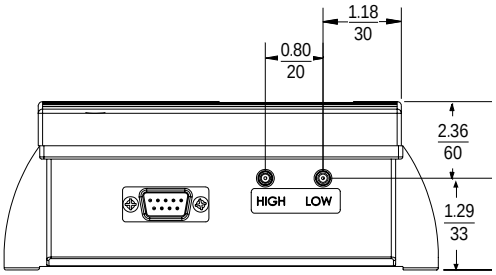

9 pin D-sub Connector Electrical Termination

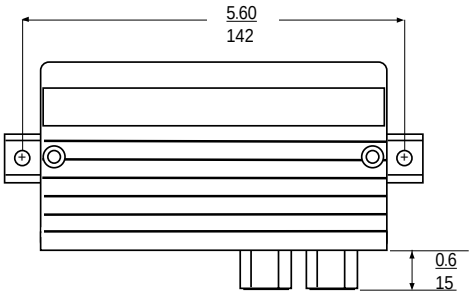

1/4" NPT Brass Fitting

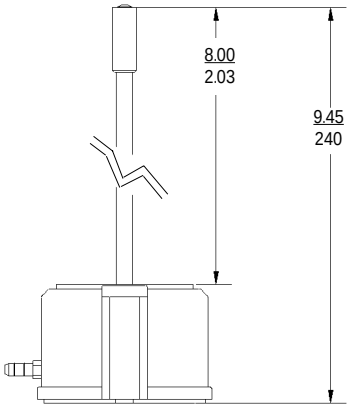

IN
MM

Static Duct Probe

Model 267 and 267MR Specifications

Model 267MR Multi-Range

Model 267w/LCD Display

Model 267w/Static Probe

Performance Data

	Standard	Optional	
Accuracy RSS* (at constant temp.)	±1.0% FS	±0.4% FS	±0.25% FS
Non-Linearity (BFSL)	±0.98% FS	±0.38% FS	±0.22% FS
Hysteresis	0.10% FS	0.10% FS	0.10% FS
Non-Repeatability	0.05% FS	0.05% FS	0.05% FS

Thermal Effects**

Compensated Range °F(°C)	+40 to +150 (+5 to +65)
Zero/Span Shift %FS/°F(°C)	±0.033 (±0.06)
Maximum Line Pressure	10 PSI
Overpressure	10 PSI in Positive or Negative Direction
Warm-up Shift	±0.1% FS Total

Position Effect***

Range	Zero Offset (%FS/G)
To 0.5 in. WC	0.60
To 1.0 in. WC	0.50
To 2.5 in. WC	0.22
To 5.0 in. WC	0.14

*RSS of Non-Linearity, Non-Repeatability and Hysteresis.
**Units calibrated at nominal 70°F. Maximum thermal error computed from this datum.
***Unit is factory calibrated at 0g effect in the vertical position.

Physical Description

Case	IP65/NEMA 4 Plastic Glass-Filled Polycarbonate UL94V-O Case
Electrical Connection	Screw Terminal Strip Inside of Case
Electrical Termination	PG-9/PG13.5 Strain Relief, 1/2" Conduit Opening, or 9 Pin D-Sub Connector*
Zero and Span Adjustment	Accessible Inside of Case
Display (Optional on 267 only)	3 1/2 Digit LCD Integral Display
Pressure Fittings	3/16" O.D. Barbed Brass for 1/4" Push-On Tubing (Standard) Static Pressure Probe (Optional) 1/4" NPTF Brass (Optional)
Mounting	2 Mounting Tabs with 0.18" Holes Pressure Probe Assembly is Supplied with a 7.8" 6061 Aluminum Alloy Probe and a Gasket to Seal Against the Duct
Weight (approx.)	9.0 ounces (255 grams) 9.5 ounces (Duct Probe Assembly)

*9 pin D-sub Connector is not suitable for NEMA4/IP-65 environments.

Electrical Data (Voltage)

Circuit	3-Wire (Exc, Gnd, Sig) Protected from Miswiring
Excitation (for 0-5 VDC Output)	9 to 30 VAC/10.2 to 42 VDC
Excitation (for 0-10 VDC Output)	12 to 30 VAC/13 to 42 VDC
Output* (Field Selectable, 267MR only)	0 to 5 VDC** 0 to 10 VDC**
Bidirectional Output at Zero	Mid-Range of Specified Output
Output Impedance	100 Ohms
Re-Ranging (267MR only)	5 Position Dip Switches (Located Inside Case)

*Calibrated into a 50K ohm load, operable into a 5000 ohm load or greater.
**Zero output factory set to within ±50mV (±25 mV for optional accuracies). Span (Full Scale) output factory set to within ±50mV. (±25 mV for optional accuracies).

Electrical Data (Current)

Circuit	2-Wire Protected from Miswiring
Output*	4 to 20 mA**
Bidirectional Output at Zero	12 mA
External Load	0 to 800 Ohms

Minimum loop supply voltage (VDC) = 9 + 0.02 x (Resistance of receiver plus line).
Maximum loop supply voltage (VDC) = 30 + 0.004 x (Resistance of receiver plus line).

Re-Ranging (267MR only)	4 Position Dip Switches (located inside case)

*Calibrated with a 24 VDC loop supply voltage and a 250 ohm load.
**Zero output factory set to within ±0.16mA (±0.08 mA for optional accuracies). Span (Full Scale) output factory set to wtihin ±0.16mA (±0.08 mA for optional accuracies).

Pressure Media

Typically Air or Similar Non-Conducting Gases.

Environmental Data

Temperature

Operating* °F (°C)	0 to +150 (-18 to +65)
Storage °F (°C)	-65 to +180 (-54 to +82)

*Operating temperature limits of the electronics only.
Pressure media temperature may be considerably higher or lower.

Application of some available options may impact standard specifications.
Specifications are subject to change without notice.

ISO 9001 Certified

Visit Setra Online:
http://www.setra.com

setra

800-257-3872

ORDERING INFORMATION

Model 267 Pressure Transducer

Code all blocks in table.

Example: Part No. 2671R25WD11G2CD for a 0 to .25 in. WC Unidirectional Range, 4-20 mA Output, 3/16" Barbed Brass Fitting, PG-9 Electrical Termination, 1% Accuracy with LCD Display

2 6 7 1 — [ ][ ][ ] — [ ] — [ ] — [ ][ ] — [ ][ ] — [ ] — [ ]

Model
2671 = 267

Pressure Ranges

in. W.C.

0R1 =	0 to 0.1	± 0.1
R25 =	0 to 0.25	± 0.25
0R5 =	0 to 0.5	± 0.5
001 =	0 to 1	±1
2R5 =	0 to 2.5	± 2.5
005 =	0 to 5	± 5
010 =	0 to 10	±10
025 =	0 to 25	±25
050 =	0 to 50	±50
100 =	0 to 100	

Pascals

025 =	0 to 25	±25
050 =	0 to 50	±50
100 =	0 to 100	±100
250 =	0 to 250	±250
500 =	0 to 500	±500
10C =	0 to 1000	±1000
25C =	0 to 2500	±2500
40C =	0 to 4000	
70C =	0 to 7000	

Units
W = in.WC
L = Pascal

Type
Differential
D = Unidirectional
B = Bidirectional

Output
11 = 4-20 mA
2D = 0-5 VDC
2E = 0-10 VDC

Pressure Fitting/ Elec. Termination
(Choose the proper electrical termination code under the pressure fitting ordered.)

3/16" Barbed Brass
Standard Fitting
G1 = PG- 13.5 Strain Relief
G2 = PG-9 Strain Relief
D9 = 9 pin D-sub Connector
A1 = 1/2" Conduit Opening

1/4" NPT F, Brass
Optional Fitting
1K = PG-9 Strain Relief
2K = PG-13.5 Strain Relief
9K = 9 pin D-sub Connector
AK = 1/2" Conduit Opening

Static Duct Probe
Optional Fitting
1P = PG-9 Strain Relief
2P = PG-13.5 Strain Relief
9P = 9 pin D-sub Connector
AP = 1/2" Conduit Opening

Accuracy
C = ±1.0%FS

Optional (w/Cal.Cert.)
E = ±0.4% FS
F = ±0.25% FS
G = ±1% FS
H = ±0.5% FS

Display
D = LCD Display[1.]
N = No Display

1.) ±0.5% FS (Code: H) accuracy is standard when ordered with the LCD display (Code: D).

Model 267MR Pressure Transducer

2 6 7 1 — [ ][ ][ ] — [ ] — D — [ ][ ] — [ ][ ] — [ ] — N

Model
2671 = 267

Pressure Ranges

in. W.C.

MR1 =	0 to 0.1	±0.05
MR2 =	0 to 0.25	± 0.125
	0 to 0.5	±0.25
	0 to 1	±0.5
MR3 =	0 to 1.25	± 0.625
	0 to 2.5	±1.25
	0 to 5.0	±2.5
MR4 =	0 to 7.5	±3.75
	0 to 15	±7.5
	0 to 30	±15

Pascals

MR5 =	0 to 25	±12.5
MR6 =	0 to 50	±25
	0 to 100	±50
	0 to 200	±100
MR7 =	0 to 250	±125
	0 to 500	±250
	0 to 1000	±500
MR8 =	0 to 625	±312
	0 to 1250	±625
	0 to 2500	±1250
MR9 =	0 to 1875	±937
	0 to 3750	±1875
	0 to 7500	±3750

Units
W = in.WC
L = Pascal

Type
D = Differential

Output
11 = 4-20 mA
2D = 0-5 VDC
2E = 0-10 VDC

Pressure Fitting/ Elec. Termination
(Choose the proper electrical termination code under the pressure fitting ordered.)

3/16" Barbed Brass
Standard Fitting
G1 = PG 13.5 Strain Relief
G2 = PG-9 Strain Relief
D9 = 9 pin D-sub Connector
A1 = 1/2" Conduit Opening

1/4" NPT F, Brass
Optional Fitting
1K = PG-9 Strain Relief
2K = PG 13.5 Strain Relief
9K = 9 pin D-sub Connector
AK = 1/2" Conduit Opening

Static Duct Probe
Optional Fitting
1P = PG-9 Strain Relief
2P = PG 13.5 Strain Relief
9P = 9 pin D-sub Connector
AP = 1/2" Conduit Opening

Accuracy
C = ±1.0%FS

Optional (w/Cal. Cert)
G = ±1.0% FS

Display
N=No Display

Ranges are factory set for the highest range.

Optional higher accuracies are not available on the 267MR.

SSP267 Rev.C 08/10/01

While we provide application assistance on all Setra products both personally and through our literature, it is the customer's responsibility to determine the suitability of the product in the application.

159 Swanson Road, Boxborough, Massachusetts 01719/Tel: 800-257-3872;
Fax: 978-264-0292; Email: sales@setra.com; Web: www.setra.com