RPL55-56-58

Radar level transmitter K group

825B112A

Features

- Continuous, non-contact level measurement for solids, liquids, pulps and slurries
- Measurement not affected by product physical variation, and very little affected by temperature changes, powders or vapours.
- Max measure range: from 10m to 70m
- Process temperature up to 180°C
- Process pressure up to 40bar
- Easy on-site configuration via menu-driven extractable matrix display
- Easy on-site calibration via matrix display or by HART communication (optional)
- 2/4 wire technology
- Radar impulses 26GHz, K group
- Level measurement and echo signal curve visualisation on matrix display
- Storage, recognition and erasement system for false echo signals

Operating principle

The microwave pulse, emittend by **RPL** radar antenna, travels to the product surface and a part of its energy is reflected and returned back to the antenna. The time gap from the emission and the retun is named “flight time” and is proportional to the distance between the product surface and the “zero point” normally located under the process conection (flanged or threaded).
RPL transmitters are equipped with a radar pulse signal detection technology, suitable to measure correctly the flightime and to obtain the level measurement.

Characteristics

RPL transmitters are suitable for heavy process conditions because they are equipped with a modern processor and with the **Echo** management software.
Echo software permits the recognition and the filtering of false echo signals in order to obtain a correct and stable level measurement.
RPL versatility allows the utilisation in heavy process conditions as high temperature, high pressure or low dielectric constant.
The low energy of the radar pulse avoids problems to process connection, to the environment and to operators.

1. Technical data

1.1 Choosing criteria

Version	RPL55	RPL56	RPL58	
Type	Radar level transmitter with threaded connection	Radar level transmitter with threaded connection and emission horn	Radar level transmitter with threaded connection and emission horn	
				
Applications	Level measurement for liquids, especially for strong erosive types, under easy process conditions	Level measurement for liquids and granulates with certain temperature and/or pressure limits, under easy process conditions	Storage/vessel measurement for granulates and powders under hazardaous process conditions	
Max. measurement range	10m	30m	70m	
Measurement accuracy	± 5mm	± 5mm	± 15mm	
Process connection	G 1" ½ A	G 1" ½ A	SS 316L flange G 1" ½ A	
Antenna material	PVDF / PTFE	SS 316L / PTFE	SS 316L / PTFE	
Process temperature	- 40... + 130 °C	- 40... + 180 °C	- 40... + 180 °C	
Process pressure	- 1... 3bar	- 1... 40bar	- 1... 16bar	
Frequency range	26 GHz	26 GHz	26 GHz	
Output signal	2 / 4 wire 4÷20mA , HART	2 / 4 wire 4÷20mA , HART	2 / 4 wire 4÷20mA , HART	
Housing	PBT	PBT	PBT	
Protection degree	IP66	IP66	IP66	

1.2 Power supply

2-wire version:

- input voltage:	15÷36Vdc
- intrinsically safe input voltage:	15÷30Vdc
- consumption:	max. 22.5mA
- max ripple:	<100Hz, Uss>1V; 100Hz÷100KHz, Uss<10mV

4-wire version:

- input voltage:	24Vdc ±10%; 230Vac ±10%
- intrinsically safe input voltage:	24Vdc ±10%; 230Vac ±10%
- consumption:	max. 4VA, 2W

1.3 Output

output signal:	4÷20mA / HART
resolution:	1,6microA
fault fixed signal:	20.5mA; 22mA; 3.8mA
load:	
- 2-wire version:	see fig.33
- 4-wire version:	max. 500ohm
integration time:	0÷99s, programmable

2-wire Load Resistance Diagram

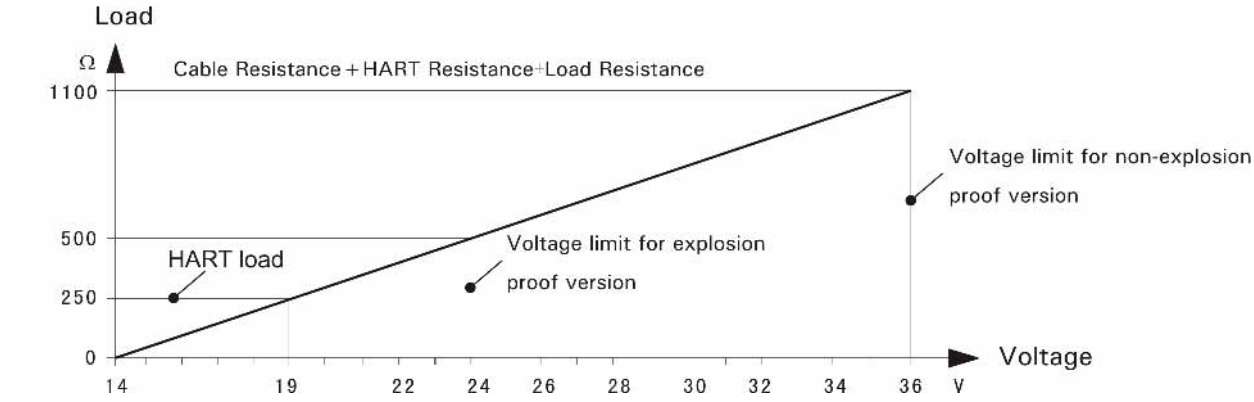

Fig.1

1.4 Cable connection

cable input:	1 x PG13,5 or 2 x PG13,5
connecting terminals :	max. wire section 2.5mm^2

1.5 Accuracy

Beam angle Vers. RPL55:

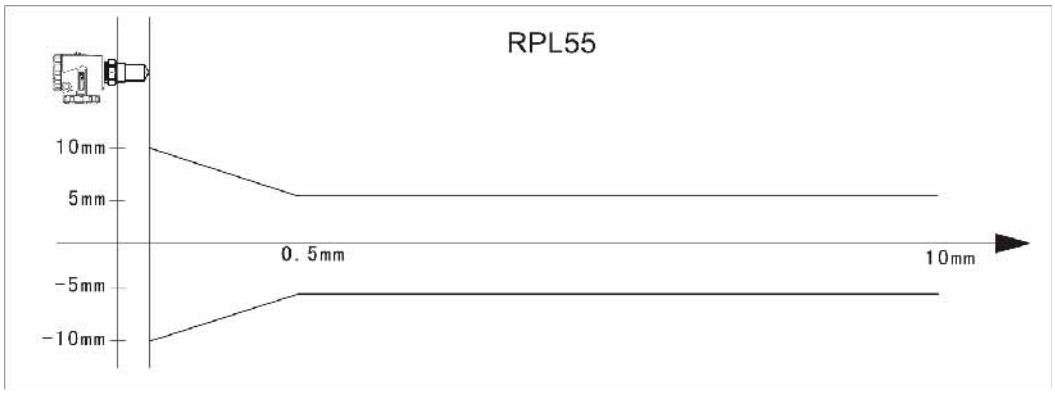

Fig.2

Beam angle Vers. RPL56: (depending on antenna size)

Ø 40	22°
Ø 48	18°
Ø 75	10°
Ø 95	8°

Fig.3

Beam angle Vers. RPL58: (depending on antenna size)

Ø 40	22°
Ø 48	18°
Ø 75	10°
Ø 95	8°

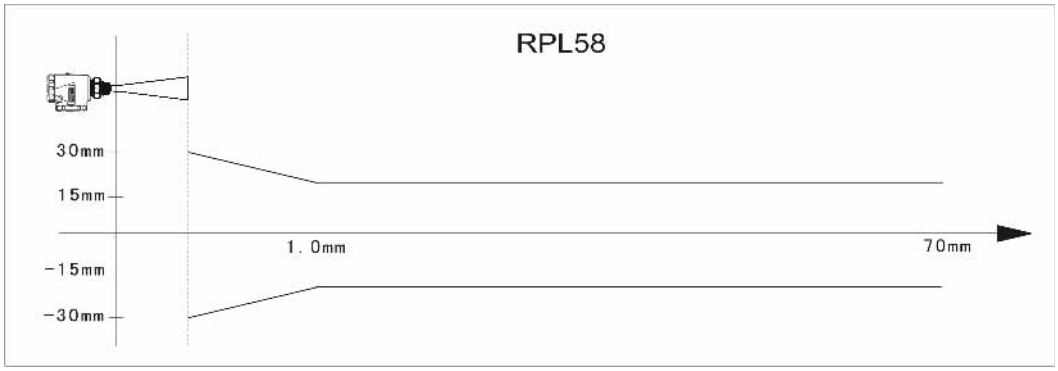

Fig.4

2. Mounting requirements

The **RPL** system measures the distance between the reference plane (lower edge of the flange) and the product surface.
In order to obtain a correct measurement be sure that:
- there are no barriers between the lower edge of the antenna and the surface of the product. Therefore avoid facilities inside the vessels, such as ladders , limit switches, heating spirals or struts.
- the microwave beams do not intersect the filling stream
- the instrument is positioned perpendicular to the surface of the product
- the maximum level must not enter into blanking zone (the area between the measurement reference plane and the antenna end). See Fig.5.

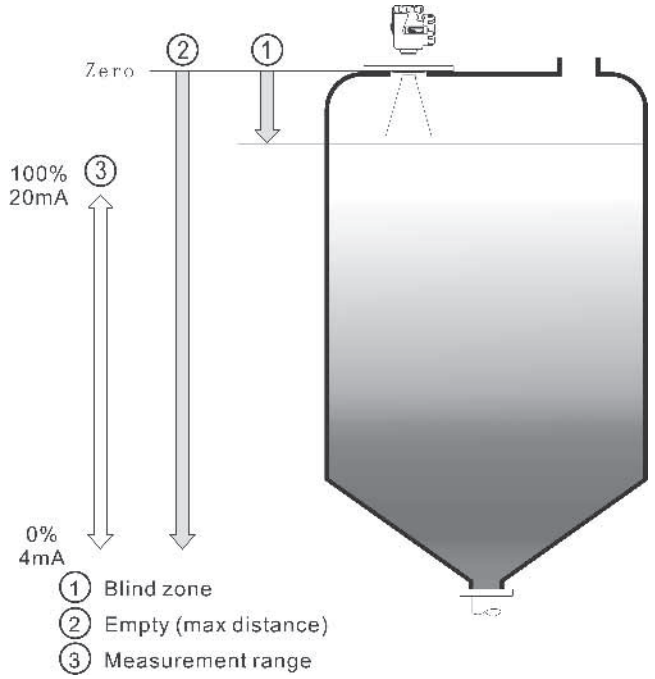

Fig.5

2.1 Mounting position

The minimum distance between the instrument and the vessel wall is 500mm (Fig.6).

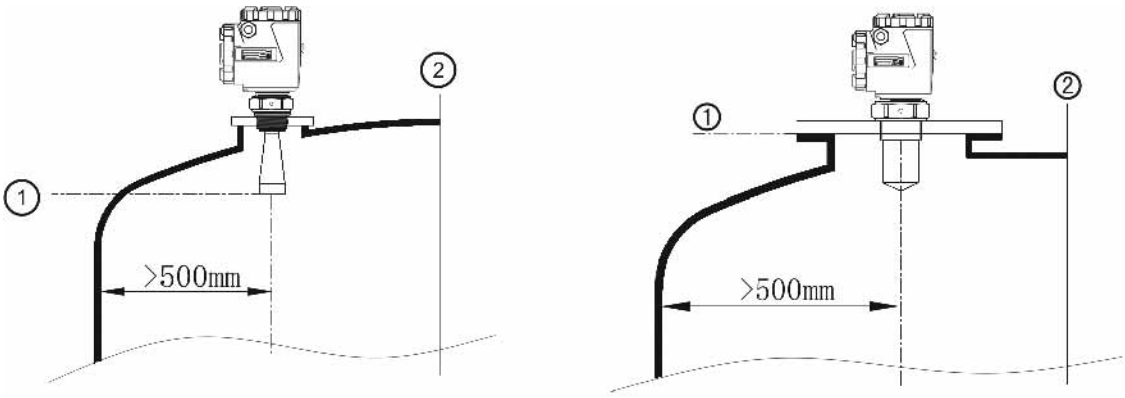

Fig.6

1 Reference plane
2 Center of vessel or symmetrical axis

The best mounting position for a conical vessel with a flat top is in the middle of the top, as shown in Fig.7.

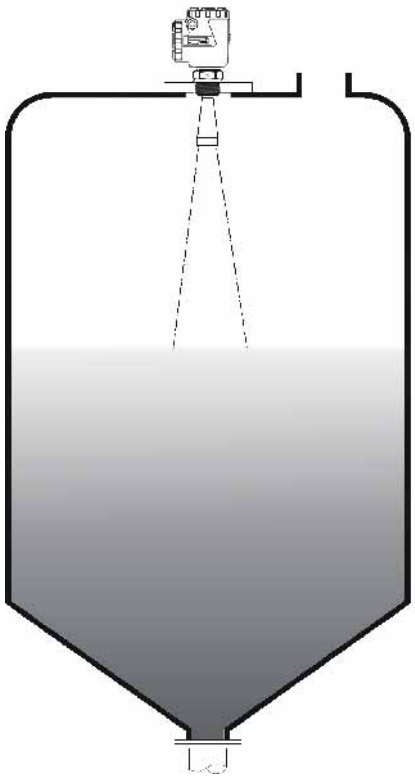

Fig.7

If possible, try to avoid stand-pipe versions or at least to reduce its dimensions.
The transducers end must protrude at least for 10mm out of the stand-pipe. We reccomend RPL56 version in presence of long stand-pipe mounted on small pipes or in applications with low dielectric constant.
In presence of products with strong reflective properties and big stand-pipe diameter , you can mount instruments on stand-pipe higher than the antenna length. The recommended values for stand-pipe heights are shown in the illustration below (Fig.9).The stand-pipe end should be smooth and burr-free, if possible also rounded. Moreover, false echo storage must be carried out afterwards

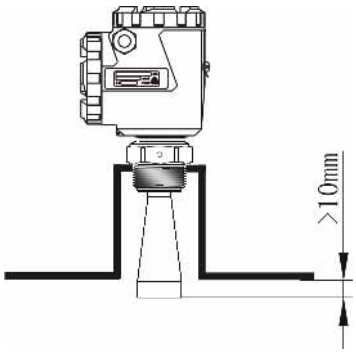

Fig.8

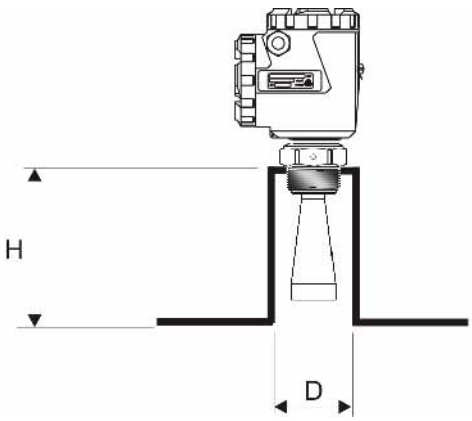

D	H
1 ½”	200mm
50mm / 2”	250mm
80mm / 2”	300mm
100mm / 2”	500mm
150mm / 2”	800mm

Fig.9

The cable must be positioned as shown in fig.10, in order to avoid possible infiltration caused by humidity or vapours.

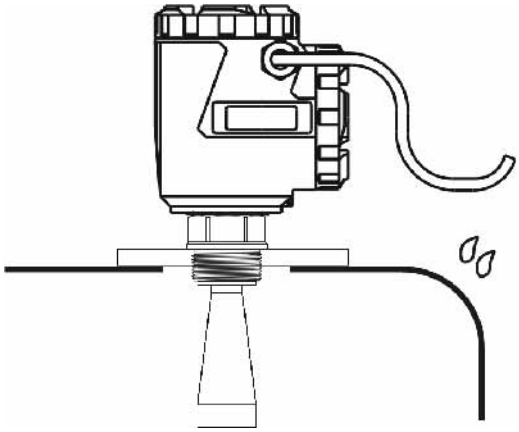

Fig.10

1) Wrong : the microwave beams must not intersect the filling stream
2) Correct: In case of outdoor mounting, use a protection cover to protect the transmitter from direct sun or rain. See fig. 11

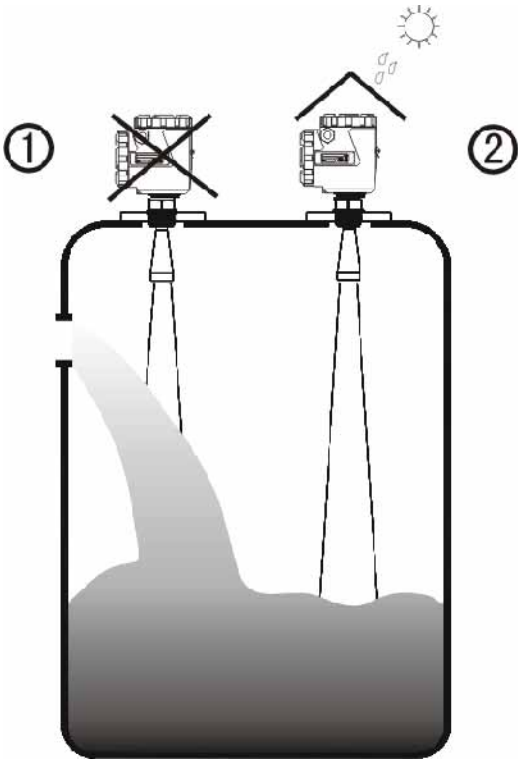

Fig.11

In case of thanks equipped with agitators (Fig.12), it is necessary to map and memorize the false echo signals created by the agitators blades. This procedure allows **RPL** tranmitter to recognize a false echo and to transmit the correct signal.

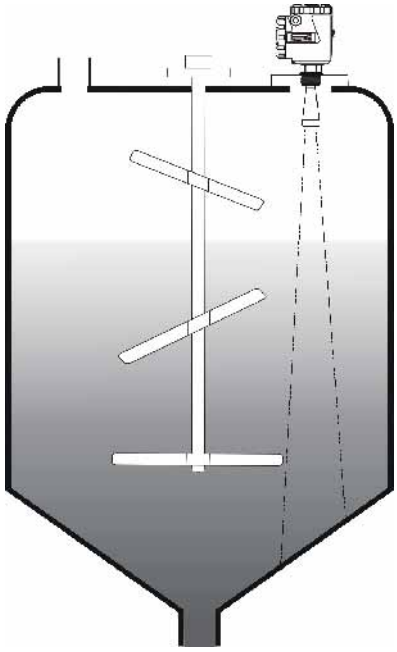

Fig.12

It is recommended to use metal stilling pipes or by-pass pipes in presence of foam or obstacles between the transmitter and the product level. For a corrrect installation it is necessary that:

a) the stilling or by-pass pipe must reach the minimum level (fig. 13-a)

b) the diameter of the vent hole must be 5÷10 mm (fig. 13-b)

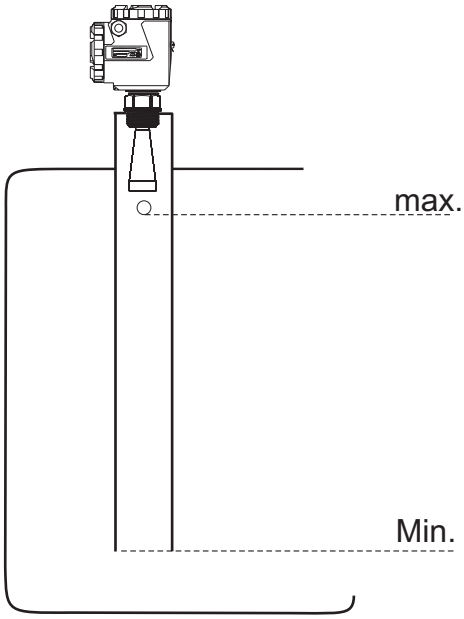

fig. 13-a

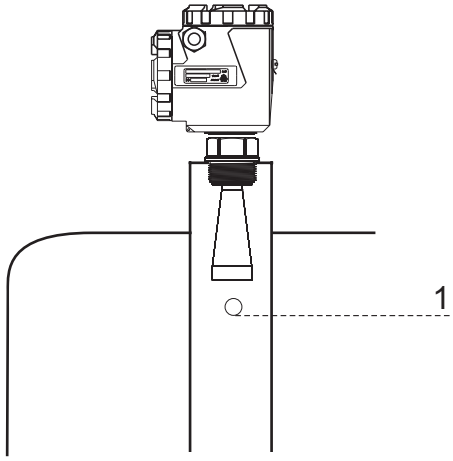

fig. 13-b

3. Electrical connections

3.1 Standard conditions

The electric supply voltage can be different according to the transmitter model. Always check the correct value indicated on the transmitter label.

It is necessary to observe installation codes and safety operations for the site and the plant conditions.

3.2 Power supply

3.2.1 4÷20mA / HART, 2-wire

The same cable is used for both electrical supply and for 4÷20mA signal. The correct values of the electrical supply are indicated on the product technical data sheet.

3.2.2 4÷20mA / HART, 4-wire

2 different cables are used for electrical supply and for 4÷20mA signal.

3.3 Connecting cables

Use a 6÷11mm diameter cable to ensure the tightness on cable glands. Use shielded cables in order to avoid transient current on the shield.

3.3.1 4÷20mA / HART

For 2-wire model use a single cable. For 4-wire model use two cables.

3.4 Earthing of cable shield

The cable shield must be earthed at both ends. Insert a ceramic capacitor, 1nF 1500V type, in order to avoid transient currents on the shield.

3.5 Wiring diagrams

See the different versions in Fig.14,15,16,17

2-wire version

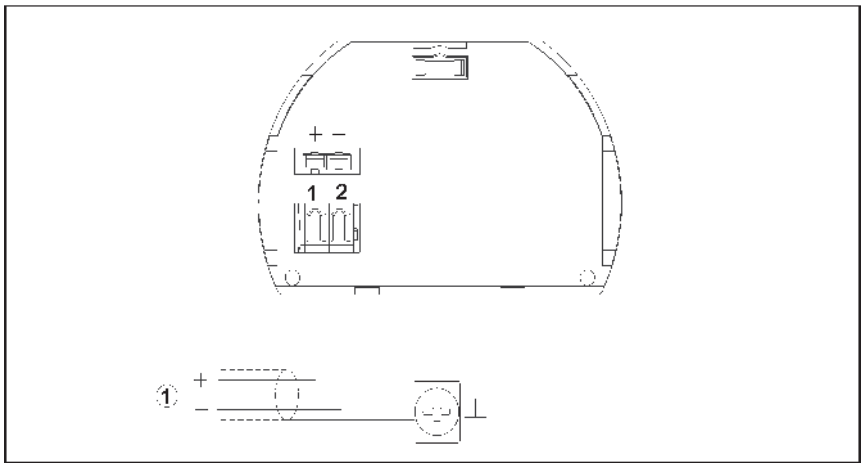

Fig.14

Connection way:220V AC power supply, 4...20mA Output

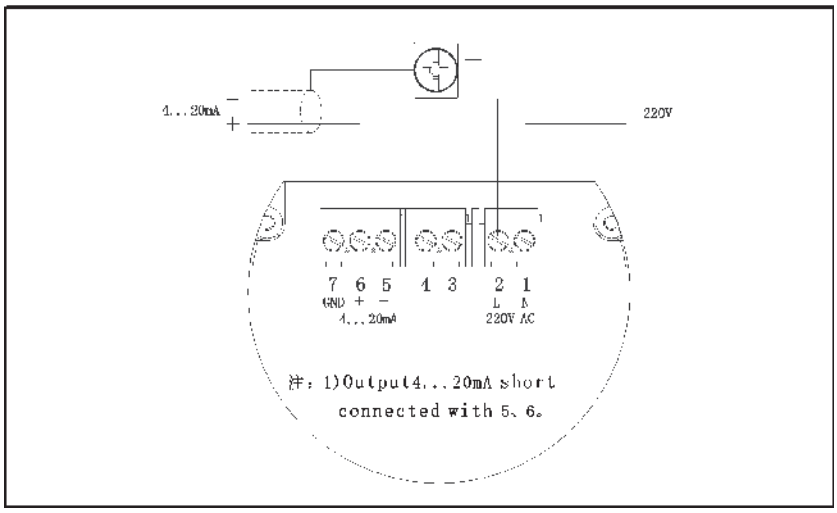

Fig.15

Connection type: 24Vdc , 4...20mA Output

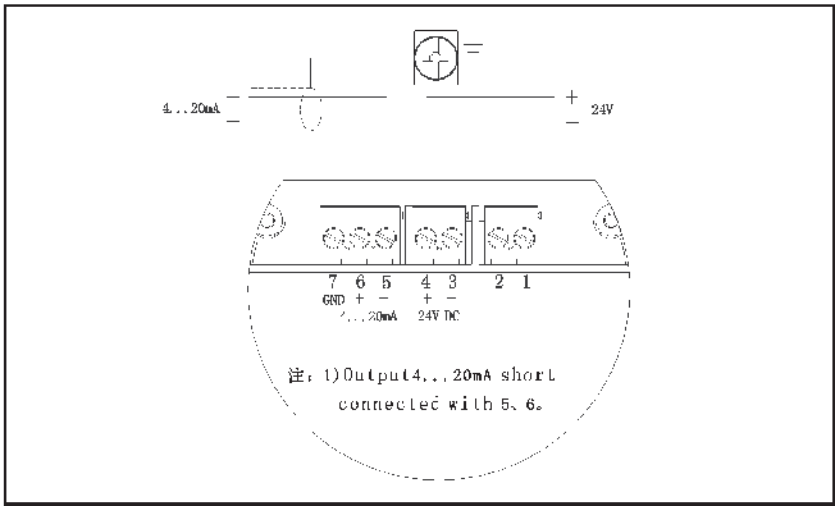

Fig.16

2-wire version - Connection type: 24Vdc , 4÷20mA Output

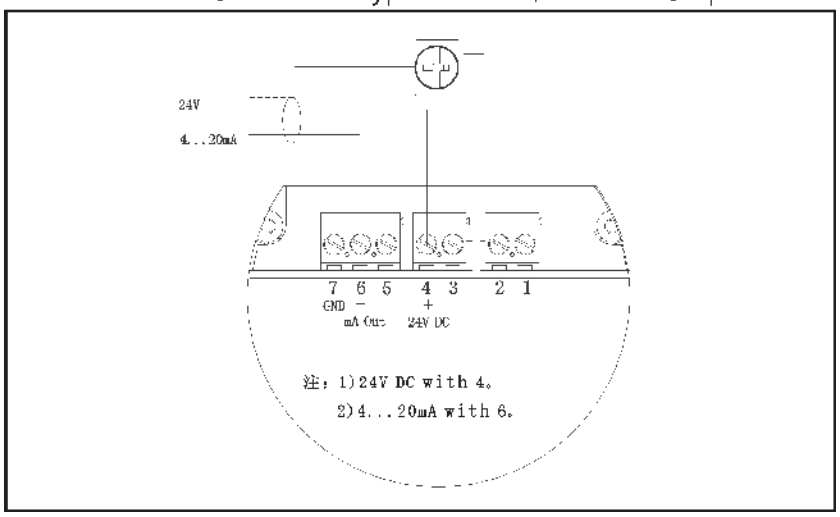

Fig.17

5.6 Intrinsically safety version (CENELEC)

For the intrinsically safety version, all the connections must be done with shielded cable with a maximum length of 500m.
The cable must gave a capacitance <0.1 microF/Km and an inductance <1mH/Km.
The **RPL** transmitter must be earthed and cannot be connected to non certified equipments.

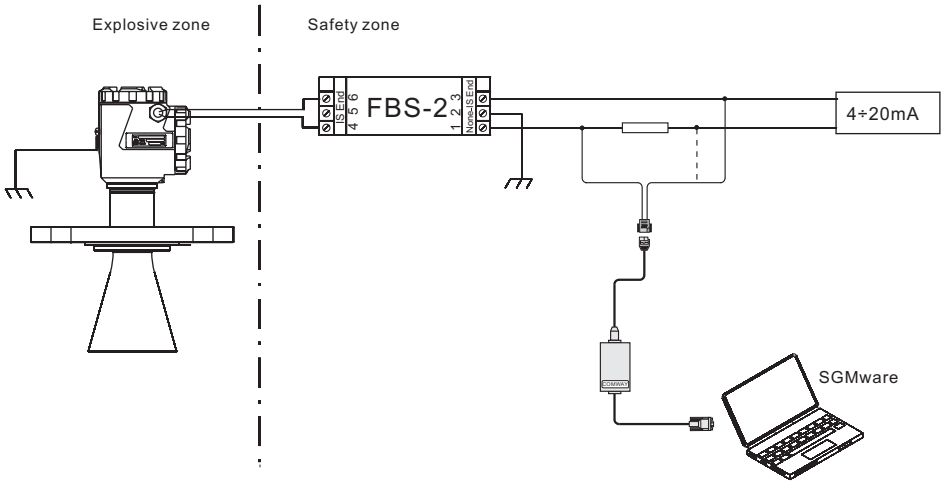

Fig.18

Connection by SGMware

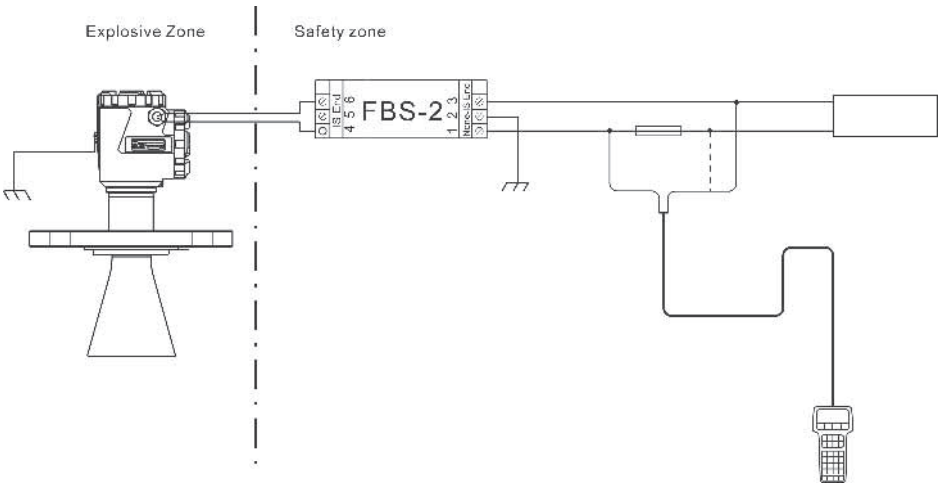

Fig.19

Connection by HART programmer

4. Configuration

4.1 Setting modalities

The **RPL** radar level transmitters have 3 configuration and setting modalities:

- by programmimg display
- by **SGMware** communication software
- by portable HART progammer

4.3 SGMware

4.3.1 Connection by HART line (fig.20)

1) RS232 connector
2) RPL5X with HART communication protocol
3) HART adapter to connect to COMWAY converter
4) 250ohm resistance
5) COMWAY converter

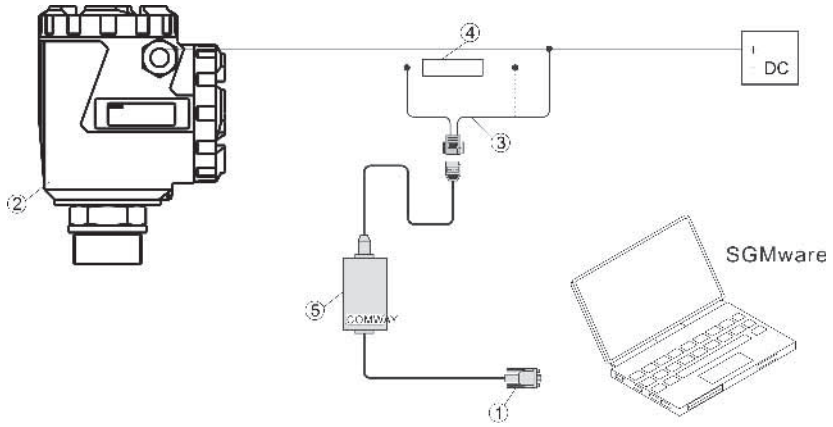

Fig.20

4.3.2 Connection by PC (fig.21)

1) RS232 connector
2) RPL5X
3) PC adapter to connect to COMWAY converter
4) COMWAY converter

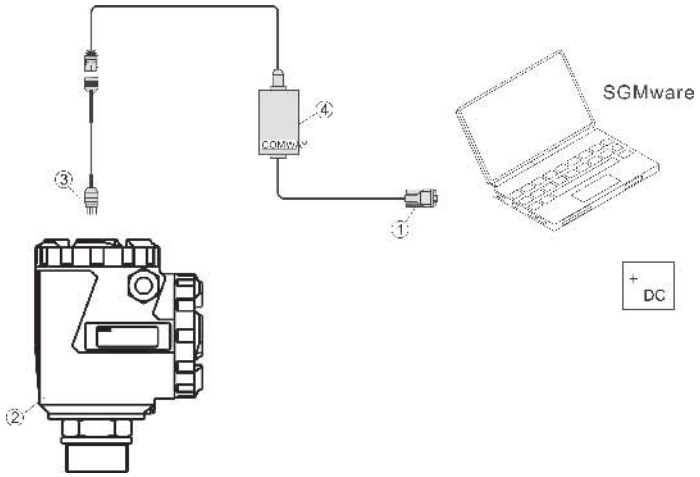

Fig.21

4.3.3 Connessione by HART programmer (fig.22)

1) HART programmer
2) RPL5X with HART communication protocol
3) 250ohm resistance

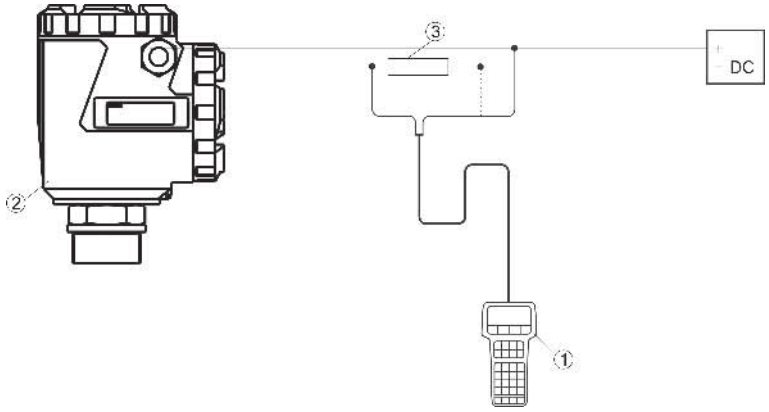

Fig.22

5. PROGRAMMING

5.1 Programming display

The programming display (fig.23) has a large matrix LCD (fig.23, 1) . The multitongue programming guide allows an easy and fast start up through the keyboard (fig.23, 2). The display also shows the distance and the istantaneous level during the operating conditions, through its transparent cover.

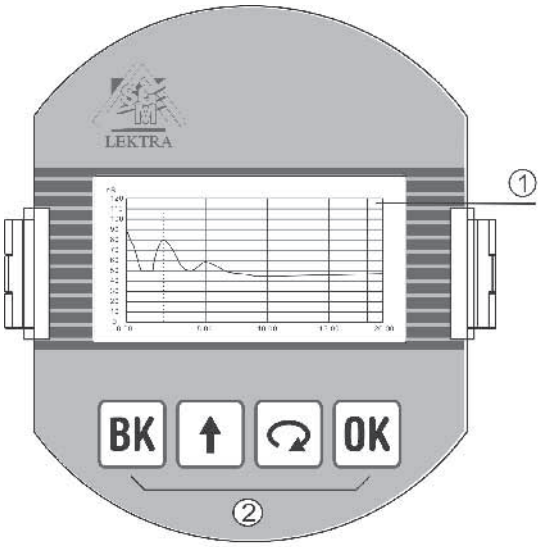

1) LCD Display
2) Keyboard

Fig.23

OK
- Programmation access
- Options confirmation
- Parameters values confirmation

- Parameter selection
- Programming value selection
- Parameters display

- Parameters value modification

BK
- Exit program
- Back to previous menu
- "**RUN**" and "**ECHO WAVE**" access

5.2 Description

The Menu Structure is shown in the next paragraphs.
When the arrow ► is positioned on the right side of the writing, press OK to choose the parameter setting menu, or press ↻ to select the next parameter. When the arrow ► is positioned on the left side of the writing, press ↻ to select the next menu and press OK to confirm. To go back to previous menu press BK .

5.2 Programming menu

5.2.1 Basic settings

In this menu is possible to set the basic adjustments of the sensor.

5.2.2 Display

In this menu you can setup the sensor display and adjust the B/W contrast for LCD.

5.2.3 Diagnostic

In this menu you can check and test the sensor. You can view the measurement peak values, the measurement status and the Echo-curve.

5.2.4 Service

In this menu you can set the falso Echo-curve, current output, language and HART mode.

5.2.5 Info

In this menu you can see the sensor information, including type, serial number, date of manufacture and software version.

5.3 Program mode

From “RUN” mode press OK to enter “PROGRAM” mode. Press BK to quit.

5.4 Parameter setting and changing

On entering Parameter Editing, the first digit of the edited parameter will be displayed in black background .
Press ↑ to modify the digit and press ↻ to edit the next digit.
At the end of the operations, press OK to confirm and to store the modifications
To select a parameter during the setting, press ↻ and confirm your choice with OK .

6. Basic settings (1)

From "RUN" mode press OK to enter the configuration menu.
Press ↻ to select and OK to confirm.
The menu item number is always displayed on the top right corner.
By selecting and confirming "**Basic settings**" in menu **1**, the display will show in sequence:

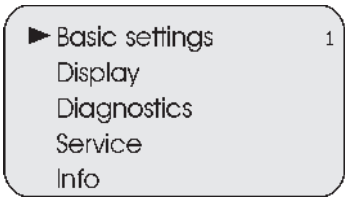

↻ Select programming menu

OK Confirm selection

Note-The menu item number is displayed on the top right corner.

6.1 Min. adjustment (1.1)

Press OK to modify the percentage value (see par. **2.4).**
Press OK again to confirm and to edit the corresponding distance value. After the setup press OK to confirm.
Press ↻ to enter menu **1.2**
Note - The lower value **(d)** shows the measured instantaneous distance.

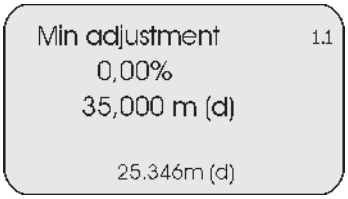

OK Enter editing menu

↻ Select the value

↑ Modify the value

OK Confirm

↻ Go to menu **1.2**

Note - The lower value **(d)** shows the istantaneous measured distance

6.2 Max. adjustment (1.2)

Press OK to modify the percentage value (see par. **2.4).**
Press OK again to confirm and to edit the corresponding distance value. After the setup press OK to confirm.
Press ↻ to enter menu **1.3**
Note - The lower value **(d)** shows the measured istantaneous distance.

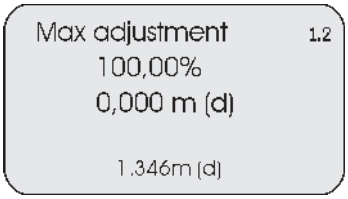

OK Enter editing menu

↻ Select the value

↑ Modify the value

OK Confirm

↻ Go to menu **1.3**

Note - The lower value **(d)** shows the istantaneous measured distance

6.3 Signal threshold (1.3)

In this menu it is possible to setup the virtual echo wave.
Press OK to enter the menu.
After the setup press OK to confirm.
Press ↻ to enter menu **1.4**

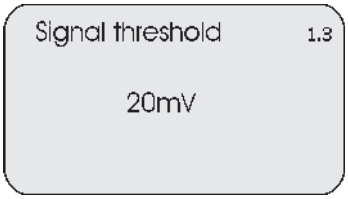

OK Enter editing menu

↻ Go to menu **1.4**

6.4 Fast level change (1.4)

Transient or foreign elements could temporarly cause unexpected rushes in measured values. In these events set the parameter on **"No"**in order to filter the rushes. Default setting is **"Yes"**.

Press OK to enter parameter modification, press to enter the next menu **1.5**

With you can select the parameter setting, with OK you can confirm your selection and go back to previous submenu.

Fast level change 1.4
Yes ►

OK Enter editing menu
Go to submenu **1.5**

Fast level change 1.4.1
► Yes
No

Select parameter
OK Confirm and go back to previous submenu

6.5 Damping (1.5)

Press OK to enter parameter modification, set the value (in seconds) and confirm with OK .
Press to go to next menu **1.6** .

Damping 1.5
0S

OK Enter editing menu
Select value
Modify the value
OK Confirm
Go to next menu **1.6**

6.6 Mapping curve (1.6)

The relationship between the measured value and the output signal 4÷20mA can be linear or non linear.
In this menu you can set the output signal 4÷20mA: "***linear***" or "***non- linear***". The setting of "***non- linear***" mode must be done with **SGMware** software through PC.
Press OK to select the 4÷20mA output mode, press to enter the next menu **1.7**.

Mapping curve 1.6
Linear ►

OK Enter editinf menu
Go to next menu **1.7**
Note -The setting of a "non-linear" mapping curve must be done with **SGMsoftware** through PC

6.7 Scaled units (1.7)

Press OK to enter parameter modification.
Press to go to next menu **1.8**.

Scaled units 1.7
► Height Volume
Weight No unit
Flow

OK Enter editing menu
Go to next menu **1.8**

6.8 Scaling (1.8)

Press OK to modify the 0%, set the value and confirm with OK. Repeat the sequence to modify the 100%.
Press to go to next menu **1.9**.

Scaling 1.8
0%= 0.00 m
100%= 0.00 m

OK Enter editing menu
Select the value
Modify the value
OK Confirm
Go to next menu **1.9**

6.9 Sensor length (1.9)

Press OK to enter parameter modification.
Press to go to next menu **1.10**.

Sensor length 1.9
5.000md)

- OK Enter editing menu
- Select value
- Modify value
- OK Confirm
- Go to next menu **1.10**

6.9.0 Near blanking (1.10)

Press OK to modify the value (in meters). Set the value and confirm with OK .
Press to go to next menu **1.11**.

Near blanking 1.10
0.400 m (d)

- OK Enter editing menu
- Select the value
- Modify the value
- OK Confirm
- Go to next menu **1.11**

6.9.1 Sensor tag (1.11)

Press OK to enter parameter modification, set the value and confirm with OK.
Press to go back to starting menu **1.1**.

Sensor tag 1.11
SENSOR

- OK Enter editing menu
- Select the value
- Modify the value
- OK Confirm
- Go to main menu **1.1**

7. Display (2)

From "RUN" mode press OK to enter the configuration menu: the following menu will be displayed (**1**).
Press to select the item and press OK to confirm.
The menu item number is always displayed on the top right corner.
By selecting and confirming **"Display"** in menu **2**, the display will show in sequence:

Basic settings 2
► Display
Diagnostics
Service
Info

- Select programming menu
- OK Confirm selection

Note-The menu item number is displayed on the top right corner.

7.1 Display value (2.1)

Press to OK to enter paramater modification and press to enter next menu **2.2**.

Display value 2.1
Distance ►

- OK Enter editing menu
- Go to next menu **2.2**

Select with the measured value you want to be displayed and press OK to confirm and to go back to previous menu.

Display value 2.1
shut off map percent
► distance scaled
height current
percent

- Select parameter
- OK Confirm and go back to menu **2.1**

7.2 Display (2.2)

Press OK to enter parameter modification.
Press to go to back to starting menu **2.1.**

LCD contrast 2.2
Adjust?

OK Enter editing menu
Go to menu **2.1**

Press to increase the contrast, press to decrease.
Press OK to confirm and to go back to previous menu.

LCD contrast 2.2

Increase the value
Decrease the value
OK Confirm and go back to menu **2.2**

8. Diagnostic (3)

From "RUN" mode press OK to enter the configuration menu: the following menu will be displayed (**1**).
Press to select the item and press OK to confirm.
The menu item number is always displayed on the top right corner.
By selecting and confirming **"Diagnostic"** in menu **3**, the display will show in sequence:

Basic settings 3
Display
► Diagnostic
Service
Info

Select programming menu
OK Confirm selection
Note-The menu item number is displayed on the top right corner.

8.1 Peak values (3.1)

In this menu are recorded the min. and max. distance values. They can be cleared to zero in menu **4.3**.
Press to enter the next menu **3.2**.

Peak values 3.1
Distance-min 0.000 m (d)
Distance-max 2.109 m (d)

Go to next menu **3.2**

8.2 Measuremerent status (3.2)

The display shows the level of the receiving signal and the general status of the sensor. Press to enter menu **3.3.**

Meas status 3.2
Meas reliability: 10dB
Sensor status: OK

Go to next menu **3.3**

8.3 Choose curve (3.3)

Press OK to enter curve selection and press to enter menu **3.4.**

Choose curve 3.3
Echo curve ►

OK Enter editing menu
Go to next menu **3.4**

Press to select the curve and press OK to confirm and to enter menu **3.4**.

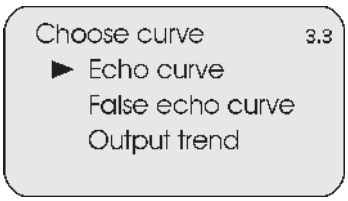

Select curve

OK Confirm and go to next menu **3.4**

8.4 Echo curve (3.4)

Press OK to enter zoom submenu of the selected curve. Press to enter the next menu **3.5**.

The 2 echo curve indicators show:

↓ - actual measure

⇩ - estimated measure

In normal operating conditions the indicators coincide in position and measure.

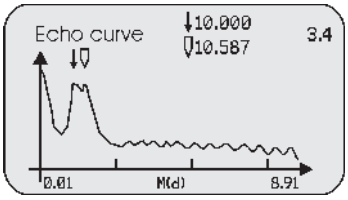

OK Enter Zoom sub-menu

Go to next menu **3.5**

Press to select the zoom mode and press OK to confirm. The display will then show the curve.

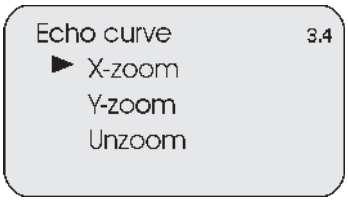

Sel. zoom mode

OK Confirm and see the curve

In case of "**X-zoom**" selection, you must proceed in the following way:

- press to move right the first line (opening line) of the zoom window
- press OK to confirm the position and to edit the second opening line
- press to move right the second line (closing line) of the zoom window
- press OK to confirm the position and to visualize the zoom window of the curve

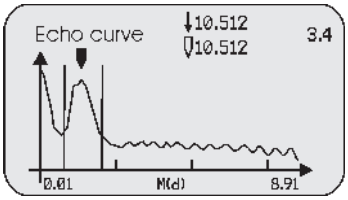

Move the first zoom line

OK Confirm first line position

Move the second zoon line

OK Confirm second line position and see the zoom window

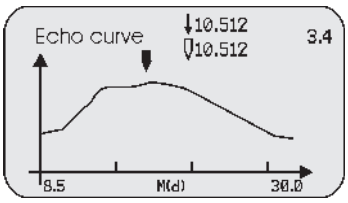

OK Go to submenu Zoom

BK Go back to menu **3.4**

Go to next menu **3.5**

8.5 Simulation (3.5)

The "**Simulation**" menu is used to simulate the 4-20mA current output. There are three options:

- **Percent:** the output current is defined as a percent value (0% correspond to 4mA and 100% to 20mA)
- **Current:** the output current is defined as a current value
- **Distance:** the output current is defined by a distance value, in relation to Min adjustment (**1.1**), Max adjustment (**1.2**) and Mapping (**1.6**).

Press OK to select simulation mode, press to go back to menu **3.1**.

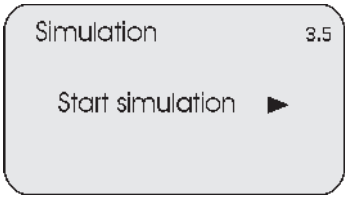

OK Enter the editing menu

Go back to menu **3.1**

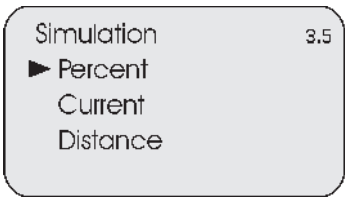

Select simulation mode

OK Confirm

9. Service (4)

From"RUN" mode press OK to enter the configuration menu. The following menu will be displayed (**1**).
Press to selct the item and press OK to confirm the selection.
The menu item number is always displayed on the top right corner.
By selecting and confirming "**Service**" in menu **4**, the display will show in sequence:

```
Basic settings      4
Dispaly
Diagnostic
► Service
Info
```

Select programming menu

OK Confirm selection

Note - The menu item number is displayed on the top right corner.

9.1 False echo (4.1)

This function gets rid of interferring signals caused by obstacles placed between the sensor and the product surface (i.e. brackets, agitators or pipes). Press OK to enter the False echo storing/modifying mode, press to enter the next menu **4.2**.

```
False Echo          4.1

  Change?
```

OK Enter editing menu

Go to next menu **4.2**

Press to select the function, then press OK to confirm and to enter the next sub-menu in case of "**Update/Create new**".
The **0%** level condition is the best way to record the False echo curve. In this way the system will monitor the whole path of the radar wave, intercepting all the obstacles that a product level > 0% would hide.

```
False echo          4.1
    Delete
    Update
  ► Create new
```

Select function

OK Confirm selection and go to next sub-menu in case of **update/create new**

Input the real actual distance that the system would measure.
Note: Check the correct distance from the product surface. In case of higher wrong input, the exsisting level would be recorded as false signal. As a consequence, the filling level will not be detected.
Press OK to set the parameter and to confirm. After the confirmation the system goes back to menu **4.1**.

```
False echo          4.1
  update/create new

  03.000  m (d)
```

Select the digit

Modify the value

OK Confirm modification and start the recording procedure of the false echo

9.2 Current output (4.2)

Press OK to enter current output sub-menu, press to enter the next menu **4.3**

```
Current output      4.2
Output mode:  4-20mA   ►
Failure mode:  no change ►
Min. current:  4mA     ►
```

OK Enter editing menu

Go to next menu **4.3**

Press to select the current output function, press OK to confirm and enter the selected item, in sequence:

Current output 4.2
► Output mode
Failure mode
Min. current

Select mode
OK Confirm and go to submenu

- **Output mode**; direct (4÷20mA) or indirect (20÷amA) output.Press to select the current output and then press OK to confirm and to go back to sub-menu **4.2**

Output mode 4.2
4-20mA ►
20-4mA.

Selelect parameter
OK Confirm and go back to menu **4.2**

- **Failure mode**; output signal forcing in case of system failure (no change/, 20.5mA or 22.0mA)
Press to select the parameter and press OK to confirm and to go back to sub-menu **4.2**

Failure mode 4.2
No change ►
20.5mA
22.0mA.

Select parameter
OK Confirm and go back to menu **4.2**

- **Min. current**; min.value of the signal (3.8mA or 4mA).
Press to select the value and press OK to confirm and to go back to sub-menu **4.2**

Min. current 4.2
► 3.8mA
4mA.

Select parameter
OK Confirm and go back to menu **4.2**

9.3 Reset (4.3)

Press OK to enter reset sub-menu, press to enter the next menu **4.4**

Reset 4.3
Select reset ►

OK Enter editing menu
Go to next menu **4.4**

Press to select the resetting parameters and press OK to confirm. The system is now reconfigured with default values.

Reset 4.3
► Basic adjustment
Factory settings
Peak value menu

Select parameter
OK Confirm and reset

9.4 Units of measurement (4.4)

Press OK to enter the units of measurement menu: metric system (m) or British system (ft). Press to enter the next menu **4.5**.

Units of measurement 4.4
m (d) ►

OK Enter editing menu
Go to next menu **4.5**

9.5 Language (4.5)

Press OK to enter the language selection menu: italian or english. Press ↻ to enter the next menu **4.6**.

Language 4.5
English ►

OK Enter editing menu
↻ Go to next menu **4.6**

9.6 HART operation mode (4.6)

Press OK to enter the **HART** operation mode: standard or multidrop. Press ↻ to enter the next menu **4.7**.

HART operation mode 4.6
Standard
Address 0

OK Enter editing menu
↻ Go to next menu **4.7**

Press ↻ to select **HART** communication mode: "**Standard**" (address 0) or "**Multidrop**" (you must input the address. On the same line there cannot be 2 or more units with the same address). Press OK to confirm: the system is now reconfigured with default values.

HART operation mode 4.6
Standard ►
Multidrop

↻ Select parameter
OK Confirm and reset

9.7 Copy sensor data (4.7)

Press OK to enter the copy sensor data menu: copy from sensor or copy to sensor. Press ↻ to enter the next menu **4.8**

Copy sensor data 4.7
Copy sensor data ?

OK Enter editing menu
↻ Go to next menu **4.8**

Press ↻ to select the operation: with "**Copy from sensor**", it is possible to save the sensor settings; with "**Copy to sensor**", all the previously saved sensor settings are restored. Press OK to confirm: the system is now reconfigured with default values.

Copy sensor data 4.7
Copy from sensor ►
Copy to sensor

↻ Select option
OK Confirm

9.8 PIN (4.8)

Press OK to enter PIN sub-menu: if the PIN is unactive the option will be "**Enable?**". Press OK to enter a 4 digit PIN code. If the PIN is active the option will be "**Cancel?**". Press ↻ to go back to menu **4.1**

PIN 4.7
Enable?

OK Enter editing menu
↻ Go back to menu **4.1**

PIN 4.7
Cancel ?

OK Enter editing menu
↻ Go back to menu **4.1**

10. Info (5)

From "RUN" mode press OK to enter the configuration menu. The following menu will be displayed (**1**).
Press ⟲ to select the item and OK to confirm.
The menu item number is always displayed on the top right corner.
By selecting and confirming "**Info**" in menu **5**, the display will show in sequence:

Basic settings 5
Display
Diagnostic
Service
▶ Info

Select programming menu

Confirm selection

Note - The menu item number is always displayed on the top right corner.

10.1 Sensor type / Serial number (5.1)

Press ⟲ to go to next menu **5.2**.

Sensor type 5.1
RPL51
Serial number
123456

Go to next menu **5.2**

10.2 Date of manuf./ Software version (5.2)

Press ⟲ to go back to menu **5.1**

Date of manufacture 5.2
2007-01-01
Software version
06.06.28

Go back to menu **5.1**

11. Menu structure

The following diagrams show the structure of the configuration menu:

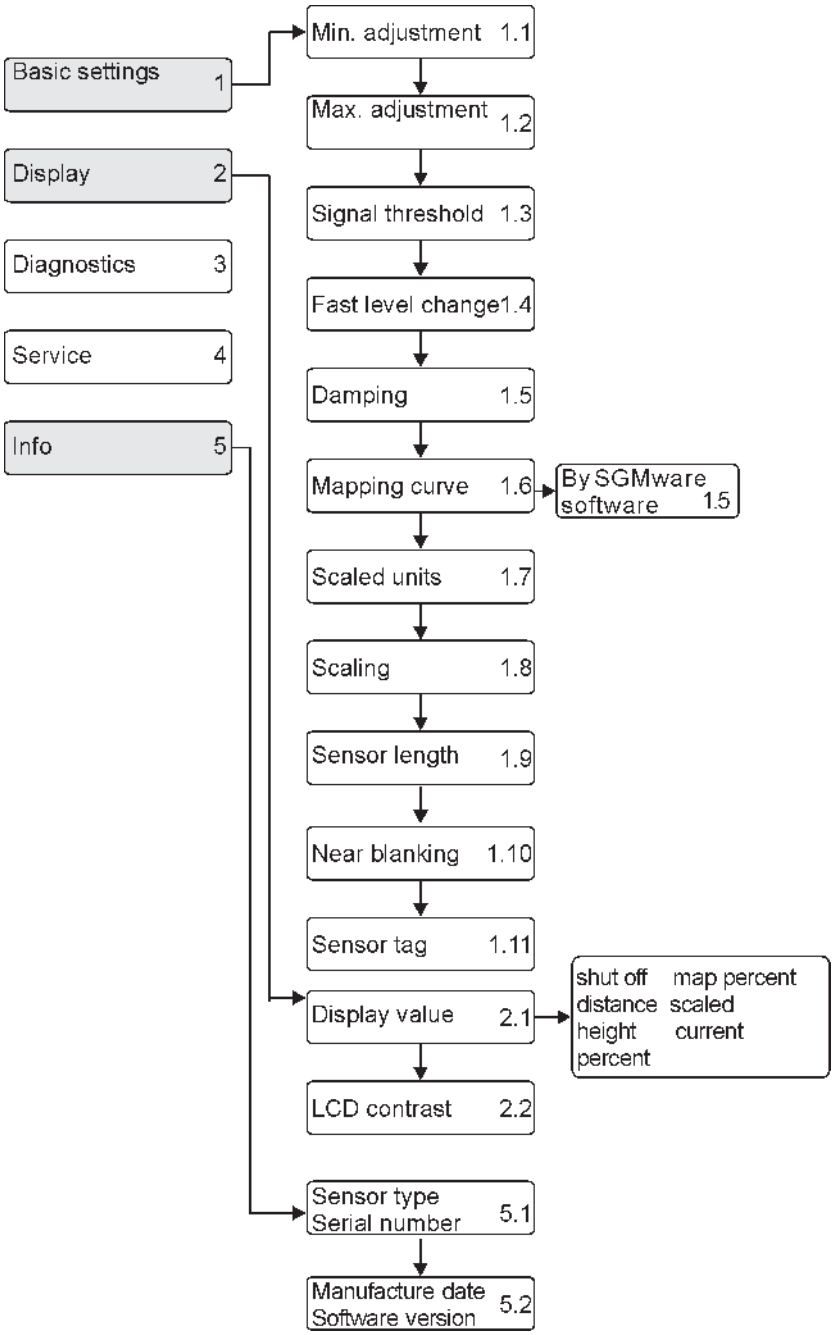

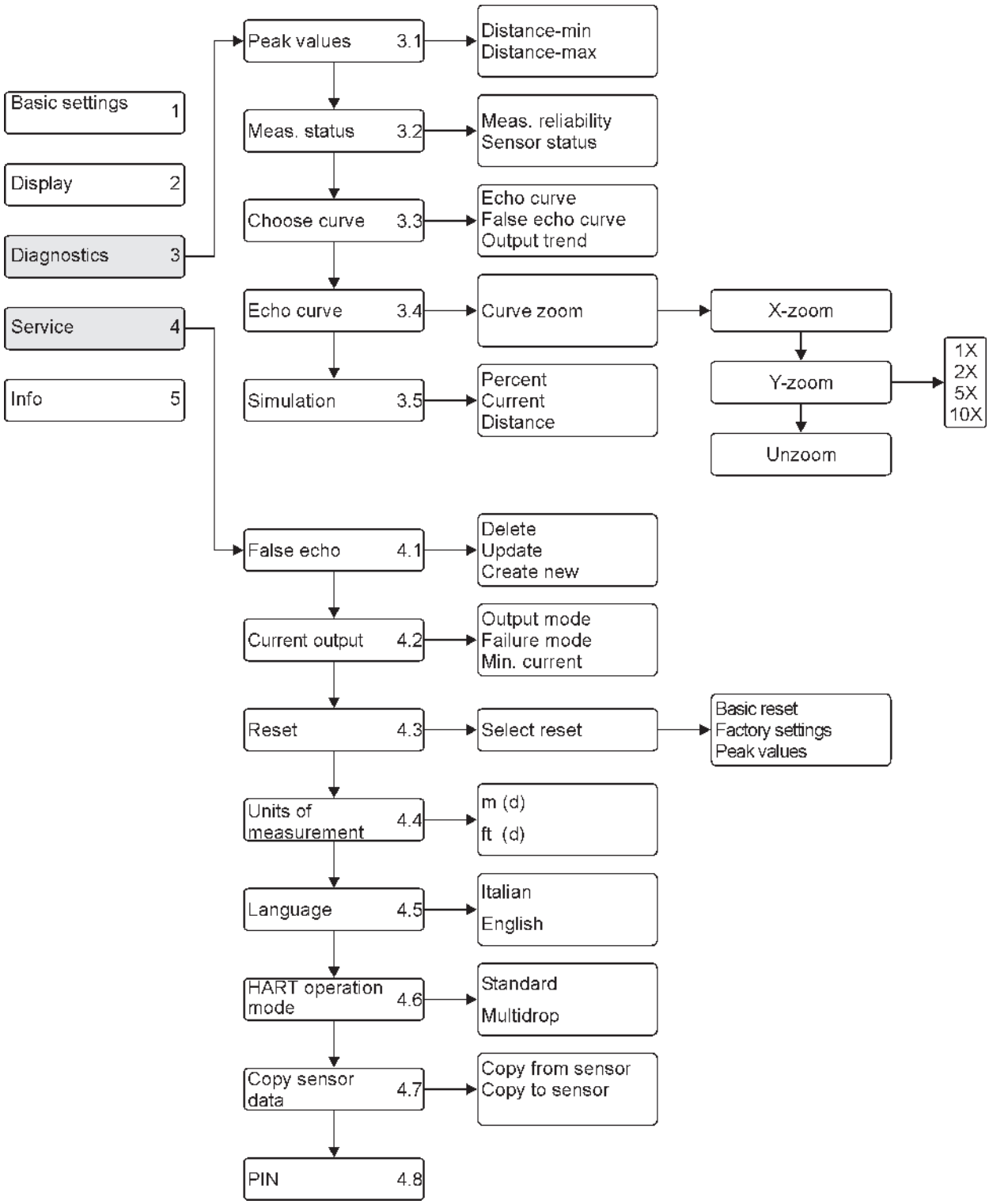
Basic settings 1
Display 2
Diagnostics 3
Service 4
Info 5
Peak values 3.1
Distance-min
Distance-max
Meas. status 3.2
Meas. reliability
Sensor status
Choose curve 3.3
Echo curve
False echo curve
Output trend
Echo curve 3.4
Curve zoom
X-zoom
Y-zoom
Unzoom
1X
2X
5X
10X
Simulation 3.5
Percent
Current
Distance
False echo 4.1
Delete
Update
Create new
Current output 4.2
Output mode
Failure mode
Min. current
Reset 4.3
Select reset
Basic reset
Factory settings
Peak values
Units of measurement 4.4
m (d)
ft (d)
Language 4.5
Italian
English
HART operation mode 4.6
Standard
Multidrop
Copy sensor data 4.7
Copy from sensor
Copy to sensor
PIN 4.8

12. Mechanical dimensions

12.1 Dimensions

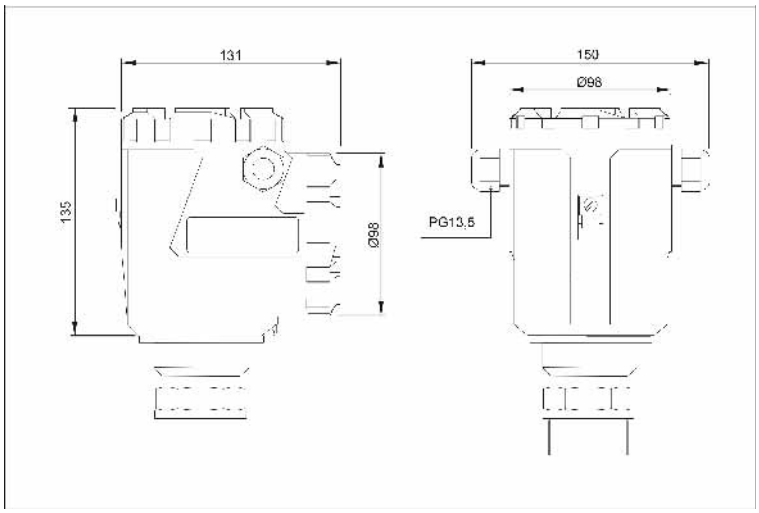

PBT Connection head

Fig.24

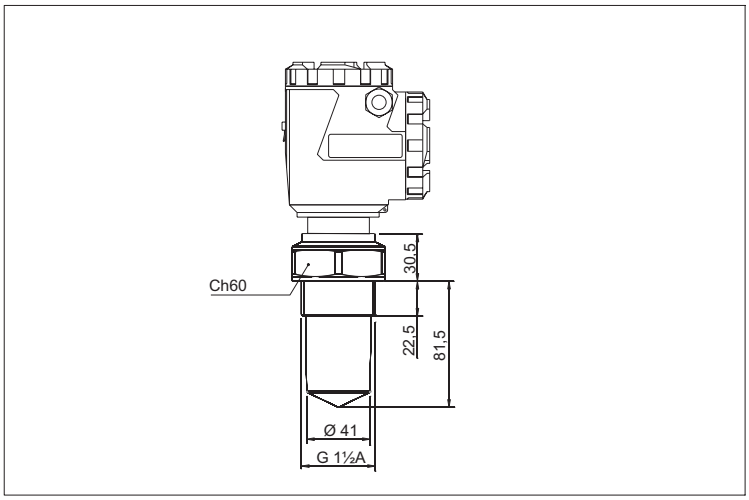

RPL55

Fig.25

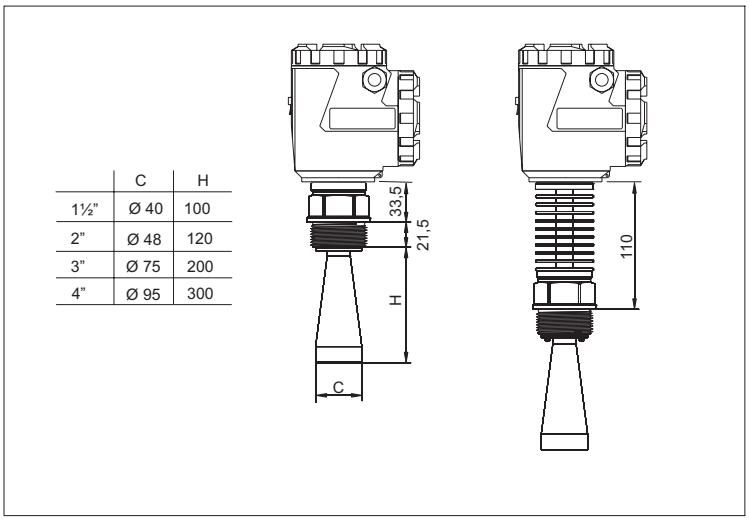

	C	H
1½"	Ø 40	100
2"	Ø 48	120
3"	Ø 75	200
4"	Ø 95	300

RPL56

Fig.26

	C	H
1½”	Ø 40	100
2”	Ø 48	120
3”	Ø 75	200
4”	Ø 95	300

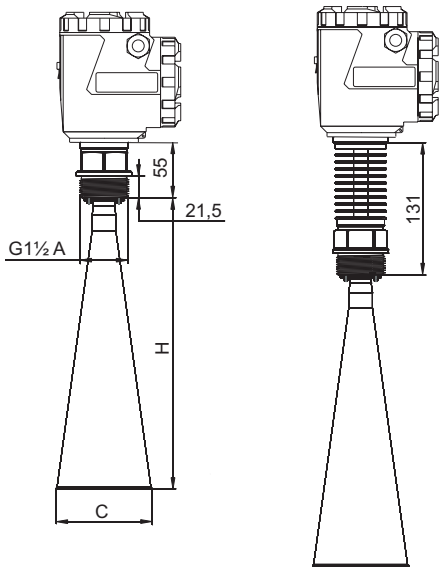

RPL58
Threaded version

Fig.27

	a	b	H	d
DN50/2”	165	122,8	11,5	4 x Ø19
DN80/3”	205	156,2	11,5	4 x Ø19
DN100/4”	220	182,5	11,5	4 x Ø19

	C	H1
1½”	Ø 40	100
2”	Ø 48	120
3”	Ø 75	200
4”	Ø 95	300

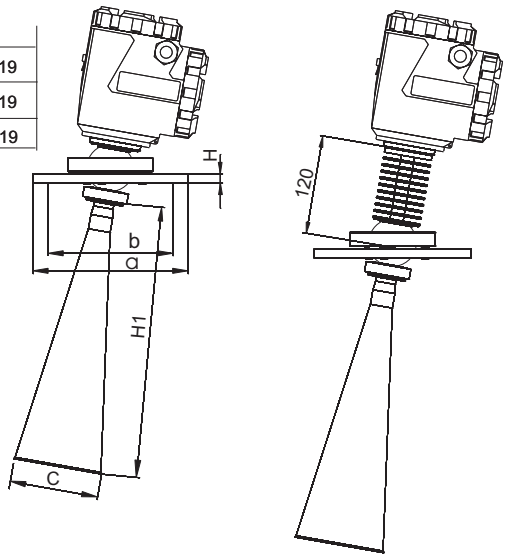

RPL58
Flanged version
with gimbal

Fig.28

RPL - Warranty

Products supplied by SGM LEKTRA are guaranteed for a period of 12 (twelve) months from delivery date according to the conditions specified in our sale conditions document. SGM LEKTRA can choose to repair or replace the Product. If the Product is repaired it will mantein the original term of guarantee, whereas if the Product is replaced it will have 12 (twelve) months of guarantee. The warranty will be null if the Client modifies, repair or uses the Products for other purposes than the normal conditions foreseen by instructions or Contract. In no circumstances shall SGM LEKTRA be liable for direct, indirect or consequiential or other loss or damage whether caused by negligence on the part of the company or its employees or otherwise howsoever arising out of defective goods.

RPL - Factory test certificate

In conformity to the company and ceck procedure I certify that the equipment:

RPL ..... part nb. .....

is conform to the technical requirements on Technical Data and it is made in conformity to the SGM-LEKTRA procedure

Quality Control Manager .....

Production and check date .....