Tel +1 (717) 767-6511
Fax +1 (717) 764-0839
www.redlion-controls.com

Bulletin No. APLSP4/6-H
Drawing No. LP0114
Released 11/02

MODEL APLSP - APOLLO SLAVE DISPLAY

- *3, 4, 5, OR 6-DIGIT, 0.56" (14.2 mm) HIGH LED DISPLAY*
- *3, AND 5-DIGIT UNITS HAVE A "-" SIGN*
- *FULL PARALLEL OR STROBED BCD*
- *SELECTABLE 0 OR 1 TRUE LOGIC FOR BOTH DATA AND STROBE INPUTS*
- *DIP SWITCH SELECTABLE DECIMAL POINTS*
- *OPTIONAL ACCESSORY BOARDS FOR CASCADING*
- *EDGE-CARD INTERFACE*
- *SEALED FRONT PANEL CONSTRUCTION (NEMA 4/IP65)*

DESCRIPTION

The Apollo Slave Display converts numerical BCD data supplied by equipment such as programmable controllers, into seven segment LED display information. The Slave Display is available in 3, 4, 5 and 6 digit versions, in either a 5 VDC or 10 to 28 VDC (3 and 5-digit versions have a "-" sign). The unit has three DIP Switch selectable decimal points for displaying in 10ths, 100ths and 1000ths. Other DIP Switches allow selection of 0 or 1 true logic and pull-down or pull-up resistors for both the Data and Strobe inputs. The unit can display the numbers 0-9 by sending the corresponding BCD information. Individual digits can be blanked by sending a Binary Code greater than 9. For the 3 and 5-digit versions, the minus sign is activated by applying the selected logic true level to the terminal marked "(-) sign" then strobing the terminal marked "(-) STR".

Four optional accessory boards provide terminal blocks for easy wire hook-up and DIP sockets to cascade the BCD lines to other units. Models ATB1 (3 and 4-digit) and ATB3 (5 and 6-digit) contain all terminal block positions and are used when hooking up one Slave Display or as the first in a series of cascaded displays. Models ATB2 (3 and 4-digit) and ATB4 (5 and 6-digit) do not have the terminal blocks for the 16 and 24 BCD data inputs. These boards are available for use in cascaded systems where the ACA1 DIP Plug Cable Assembly is used to connect the data inputs.

SAFETY SUMMARY

All safety related regulations, local codes and instructions that appear in the manual or on equipment must be observed to ensure personal safety and to prevent damage to either the instrument or equipment connected to it. If equipment is used in a manner not specified by the manufacturer, the protection provided by the equipment may be impaired.

CAUTION: Read complete instructions prior to installation and operation of the unit.

SPECIFICATIONS

1. **POWER:** Power supply must be Class 2 or SELV rated.
   APLSP3A, APLSP4A: 5 VDC ±20% @ 200 mA max.
   APLSP5A, APLSP6A: 5 VDC ±20% @ 235 mA max.
   APLSP3B, APLSP4B: 10 to 28 VDC @ 200 mA max.
   APLSP5B, APLSP6B: 10 to 28 VDC @ 235 mA max.
2. **INPUT IMPEDANCE (ALL Inputs):** 100 KΩ
3. **INPUT TRIGGER LEVELS:**
   5 V Versions: V_{IL} = 1.0 V, V_{IH} = 4.0 V, max. input voltage = 28 VDC
   10 to 28 V Version: V_{IL} = 3.0 V, V_{IH} = 10.0 V, max. input voltage = 28 VDC
4. **CERTIFICATIONS AND COMPLIANCES**:
   SAFETY
   IEC 1010-1, EN 61010-1: Safety requirements for electrical equipment for measurement, control, and laboratory use, Part 1.
   IP65 Enclosure rating (Face only), IEC 529
   Type 4 Enclosure rating (Face only), UL50
   ELECTROMAGNETIC COMPATIBILITY:
   Immunity to EN 50082-2

Electrostatic discharge	EN 61000-4-2	Level 2; 4 Kv contact Level 3; 8 Kv air
Electromagnetic RF fields	EN 61000-4-3	Level 3; 10 V/m 80 MHz - 1 GHz
Fast transients (burst)	EN 61000-4-4	Level 4; 2 Kv I/O Level 3; 2 Kv power
RF conducted interference	EN 61000-4-6	Level 3; 10 V/rms 150 KHz - 80 MHz
Simulation of cordless telephone	ENV 50204	Level 3; 10 V/m 900 MHz ± 5 MHz 200 Hz, 50% duty cycle
Emissions to EN 50081-2		
RF interference	EN 55011	Enclosure class B Power mains class B

   Refer to the EMC Installation Guidelines section of this bulletin for additional information.
5. **ENVIRONMENTAL CONDITIONS**:
   Operating Temperature: 0 to 50°C
   Storage Temperature: -40 to 70°C
   Operating and Storage Humidity: 85% max. relative humidity (non-condensing) from 0°C to 50°C.
   Altitude: Up to 2000 meters
6. **CONSTRUCTION**: This unit is rated for NEMA 4/IP65 indoor use. Installation Category I, Pollution Degree 2
7. **WEIGHT**: 0.9 lbs (0.41 Kg)

DIMENSIONS In inches (mm)

Note: Recommended minimum clearance (behind the panel) for mounting clip installation is 2.1" (53.3) H x 5.5" (140) W.

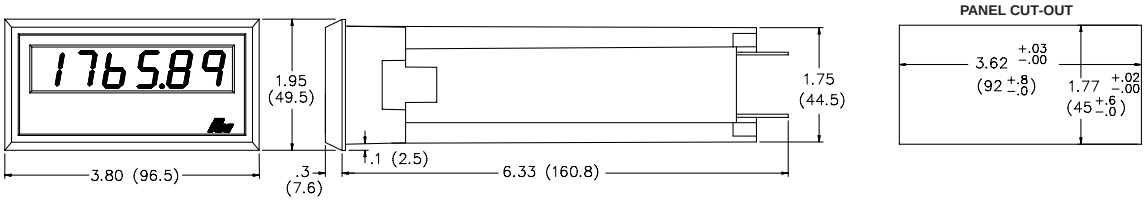

LOGIC TRUE SELECTION

The Apollo Slave Display has four DIP switch positions used to set the unit to be compatible with the logic convention of the output device (programmable controller, etc.). DIP switch A (SWA) has two switch positions which provide pull-up (SNK) or pull-down (SRC) resistors on all Data and Strobe inputs. Position 1 and 2 of DIP switch B (SWB) select the logic true state of the "DATA" and "STROBE" inputs. A "0" logic true level for the "STROBE" lines indicates that it is necessary to pull the "STROBE" lines low to allow the data to be strobed in and displayed. A "0" logic true level for the "DATA" inputs indicate that to activate the 1, 2, 4, or 8 data inputs, they must be pulled low. For example, a 9 is entered by pulling the 1 and 8 data inputs low and strobing the digit. A "1" logic true condition indicates that the line must be brought high to be activated. When setting up the DIP switches to a logic true level, both "DAT" or both "STR" switches on "SWA" and "SWB" should be in the same position (0 or 1).

NON-MULTIPLEXED (Input Following) OPERATION

Non-multiplexed operation can be used when the BCD input information for each digit is available all of the time. In this mode of operation, the strobe inputs are set in their logic true state. When this is done the data sent to the unit will be displayed immediately. In setting up the DIP switches for this mode, the "STR" position on "SWA" is set opposite to the "STR" position on "SWB". Both "DAT" switch positions should be set to the same state depending on the logic (0 or 1).

Multiplexed operation is required when the BCD data is available to the digit/s only part of the time. This normally occurs in systems which utilize the BCD data lines to send data to more than one digit, more than one display, or both. For the Slave Display to function properly, the digit Strobes must be activated when the correct information is present for the digit/s being strobed.

MULTIPLEXED (Strobed) OPERATION

When BCD lines are multiplexed among digits, a total of only four BCD lines are required, however , a separate strobe line is needed for each digit. The four data lines are connected in parallel to each individual digit of the display/s.

In full parallel multiplexed operation, there are four separate BCD input lines per digit. All BCD data information is available to the Slave Display at the same time and only one "STROBE" line is required for each Slave Display (all "STROBE" lines are tied together).

When setting up the Dip switches for the proper logic convention, both "DAT" switch positions should be set to the same state and both "STR" switch positions should be set the same.

CASCADING DISPLAYS

It is possible to "share" the 16/24 BCD Data lines (16 lines for 4 digit, 24 lines for six digit) among several Slave Displays. To accomplish this, each Slave Display must have its data strobed in at different times which requires multiplexed operation and a separate strobe line or lines for each display. If data can be strobed into each display, four or six digits at a time, only one strobe line is required for each additional unit cascaded. If only four BCD data lines are available from the output device, they must be paralleled with the other digits and four or six strobe lines would be required for each additional Slave Display.

The number of Slave Displays that can be cascaded (i.e. BCD Data or Strobe input lines per output) is limited by the drive capabilities of the output device. The Slave Display has one 100 KΩ pull-up (to the unit supply) or pull-down resistor on each BCD Data or Strobe input when set up switches are in the SNK or SRC position respectively.

The connection diagrams below show "full parallel" and "4-bit multiplexed" cascaded systems using the optional accessory boards, ATB3 and ATB4. In each diagram the ACA1 DIP Plug Cable Assembly parallels the BCD data lines to the second display. Additional units can be added in a "daisy chain" configuration by utilizing additional cable assemblies and plugging them into the unused DIP sockets. The pin 1's of the cable assembly must be connected to the corresponding pin 1's of the DIP socket.

4-DIGIT "FULL PARALLEL" CASCADED SYSTEM

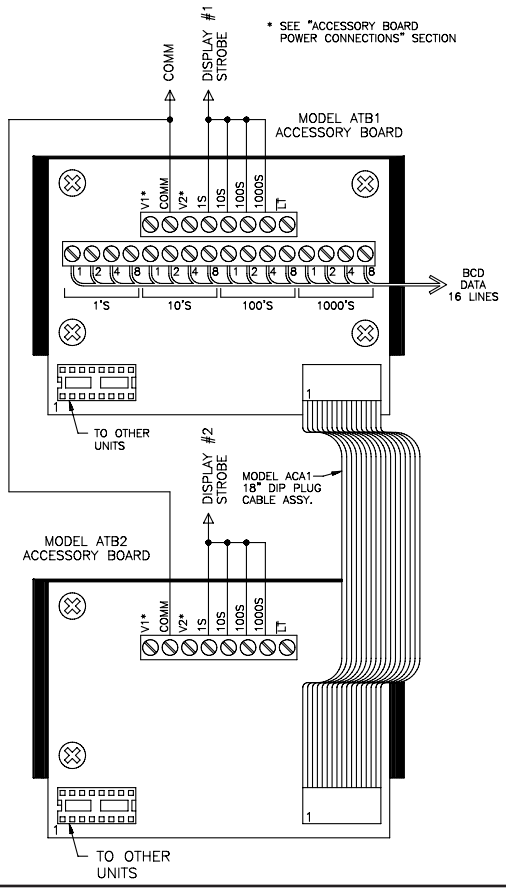

6-DIGIT "FULL PARALLEL" CASCADED SYSTEM

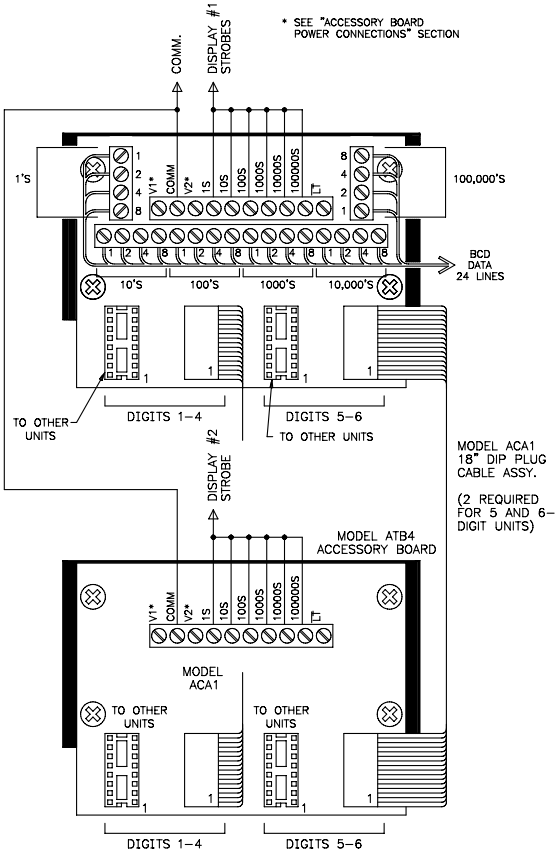

4-DIGIT "4-BIT MULTIPLEXED" CASCADED SYSTEM

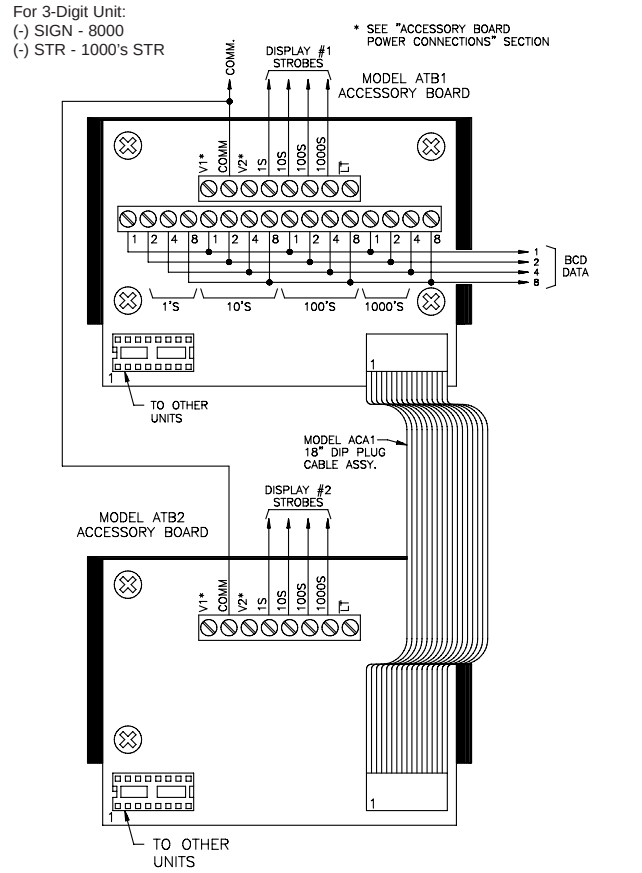

6-DIGIT "4-BIT MULTIPLEXED" CASCADED SYSTEM

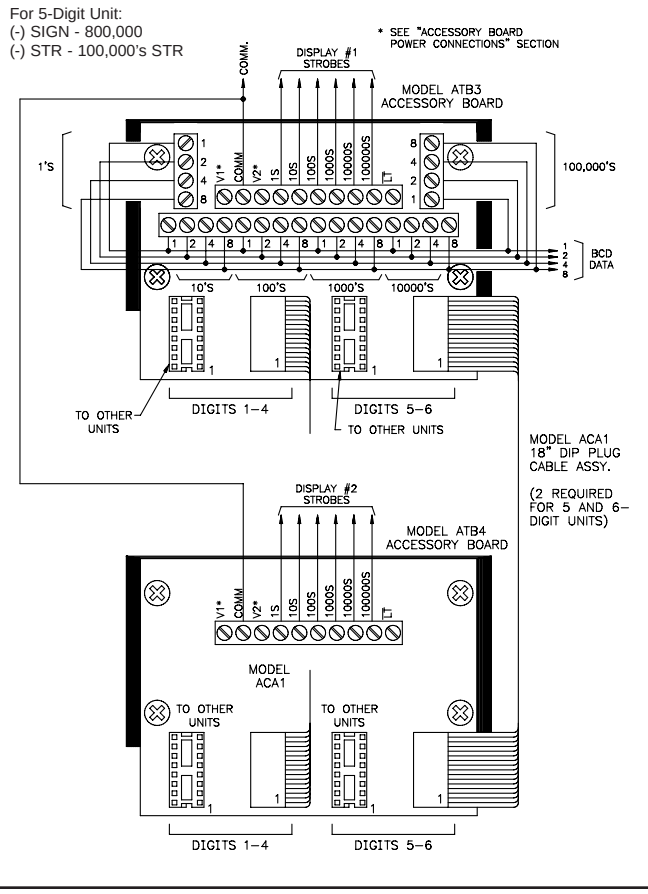

EMC Installation Guidelines

Although this unit is designed with a high degree of immunity to ElectroMagnetic Interference (EMI), proper installation and wiring methods must be followed to ensure compatibility in each application. The type of the electrical noise, source or coupling method into the unit may be different for various installations. The unit becomes more immune to EMI with fewer I/O connections. Cable length, routing and shield termination are very important and can mean the difference between a successful or a troublesome installation. Listed below are some additional EMC guidelines for successful installation in an industrial environment.

1. The unit should be mounted in a metal enclosure, that is properly connected to protective earth.
2. Use shielded (screened) cables for all Signal and Control inputs. The shield (screen) pigtail connection should be made as short as possible. The connection point for the shield depends somewhat upon the application. Listed below are the recommended methods of connecting the shield, in order of their effectiveness.
   a. Connect the shield only at the panel where the unit is mounted to earth ground (protective earth).
   b. Connect the shield to earth ground at both ends of the cable, usually when the noise source frequency is above 1 MHz.
   c. Connect the shield to common of the unit and leave the other end of the shield unconnected and insulated from earth ground.
3. Never run Signal or Control cables in the same conduit or raceway with AC power lines, conductors feeding motors, solenoids, SCR controls, and heaters, etc. The cables should be run in metal conduit that is properly grounded. This is especially useful in applications where cable runs are long and portable two-way radios are used in close proximity or if the installation is near a commercial radio transmitter.
4. Signal or Control cables within an enclosure should be routed as far away as possible from contactors, control relays, transformers, and other noisy components.
5. In extremely high EMI environments, the use of external EMI suppression devices, such as ferrite suppression cores, is effective. Install them on Signal and Control cables as close to the unit as possible. Loop the cable through the core several times or use multiple cores on each cable for additional protection. Install line filters on the power input cable to the unit to suppress power line interference. Install them near the power entry point of the enclosure. The following EMI suppression devices (or equivalent) are recommended:
   Ferrite Suppression Cores for signal and control cables:
   Fair-Rite # 0443167251 (RLC #FCOR0000)
   TDK # ZCAT3035-1330A
   Steward #28B2029-0A0
   Line Filters for input power cables:
   Schaffner # FN610-1/07 (RLC #LFIL0000)
   Schaffner # FN670-1.8/07
   Corcom #1VB3
   Corcom #1VR3
   Note: *Reference manufacturer's instructions when installing a line filter.*
6. Long cable runs are more susceptible to EMI pickup than short cable runs. Therefore, keep cable runs as short as possible.

DIP SWITCH POSITIONS

These Data (DAT) and Strobe (STR) switch positions are normally set to the same position on SWA and SWB.

SWA:

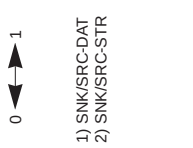

1) Internally connects a 100 KΩ pull-down (SRC) or pull-up (SNK) resistor to each of the BCD data inputs.
2) Internally connects a 100 KΩ pull-down (SRC) or pull-up (SNK) resistor to each of the STR inputs.

SWB:

1) Selects a 0 or 1 logic true level for BCD data inputs.
2) Selects a 0 or 1 logic true level for strobe inputs.
3) Tenths Decimal Point.
4) Hundredths Decimal Point.
5) Thousandths Decimal Point.

TIMING SPECIFICATIONS FOR STROBE & DATA INPUTS

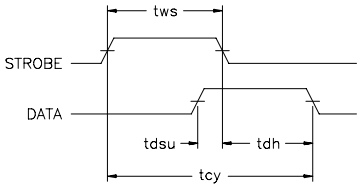

tws min.	=	5 µs (strobe pulse width)
tdsu min.	=	1 µs (data set-up time)
tdh min.	=	5 µs (data hold time)
tcy min.	=	10 µs (cycle time)
fscan max.	=	1/tcy min. = 100 KHz (scan rate)

Note: Specifications shown are based on a sourcing input with V_{IH} and V_{IL} levels equal to 100% and 0% of power supply respectively.

CONNECTIONS

All conductors should meet voltage and current ratings for each terminal. Also cabling should conform to appropriate standards of good installation, local codes and regulations. It is recommended that power supplied to the unit be protected by a fuse or circuit breaker.

There are several different ways to make connections to the Slave Display. Four optional accessory boards (Model ATB1, ATB2, ATB3 and ATB4) provide screw clamp terminals for easy wire termination and DIP sockets for ease of cascading displays. Models ATB1 and ATB3 have screw clamp terminations for all input connections. Models ATB2 and ATB4 have screw clamp terminations for all inputs except the BCD Data Inputs. ATB2 and ATB4 are used when the BCD data lines are to be cascaded to other units using the DIP Plug Cable Assembly. The preceding drawings show all accessory boards being utilized in a system.

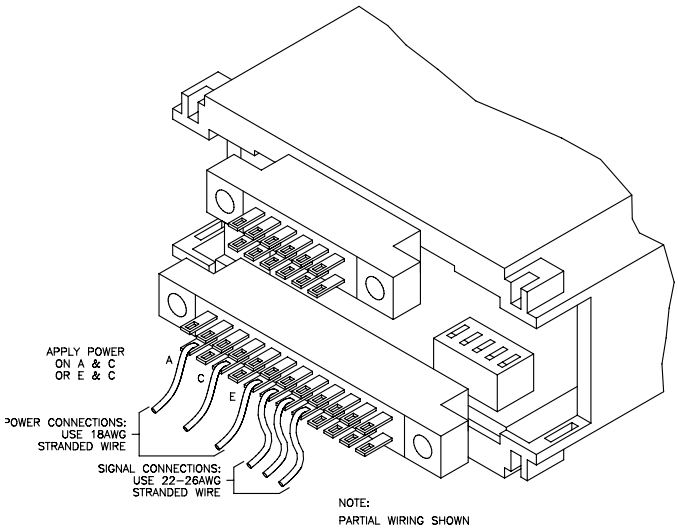

An optional 24-pin (Model ACE1) for 3 and 4 digit slaves and 24 & 12-pin (Model ACE4) for 5 and 6 digit slaves, provide another way to make connection. These edgecard connectors have 0.156" center to center spacing and require the soldering of the wires to the connector for wire termination. The diagram above shows edgecard connectors being used with the Slave Display.

EDGECARD CONNECTOR PIN-OUTS

MODEL APLSP3A: "5 VDC VERSION"

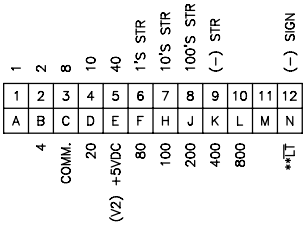

MODEL APLSP3B: "10 to 28 VDC VERSION"

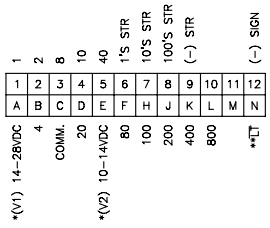

MODEL APLSP4A: "5 VDC VERSION"
MODEL APLSP5A: Bottom Connector

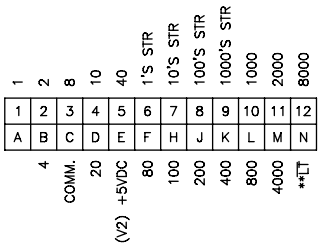

MODEL APLSP4B: "10 to 28 VDC VERSION"
MODEL APLSP5B: Bottom Connector

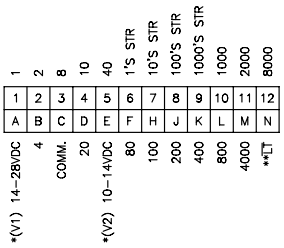

MODEL APLSP6A:
MODEL APLSP5A-B: Top Connector

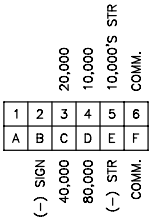

MODEL APLSP6B:
MODEL APLSP6A-B: Top Connector

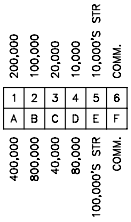

* Apply power on A and C or E and C.

** When "LT" (LAMP TEST) is connected to "COMM." the unit will display all 8's.

ACCESSORY BOARD POWER CONNECTIONS

The DC power to the unit is applied between “V1” or “V2” and “COMMON” of Terminal Block A (TBA). The voltage applied to the terminals depends on the “Voltage Version” that is being installed. Check to be sure that you have the proper unit for your application. Refer to the preceding diagrams to determine which terminal is to be used.

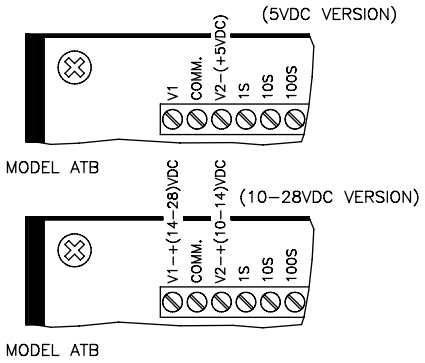

ACCESSORY BOARD INSTALLATION

The optional accessory board (ATB) is mounted directly to the rear of the Apollo Slave Display. The accessory board can be installed before or after the unit has been installed into the panel. Install the four self-retaining spacers into the four holes on the accessory board as shown in the diagram. Mount the accessory board onto the Slave Display. Install the four screws through the spacers and carefully tighten them until they are snug.

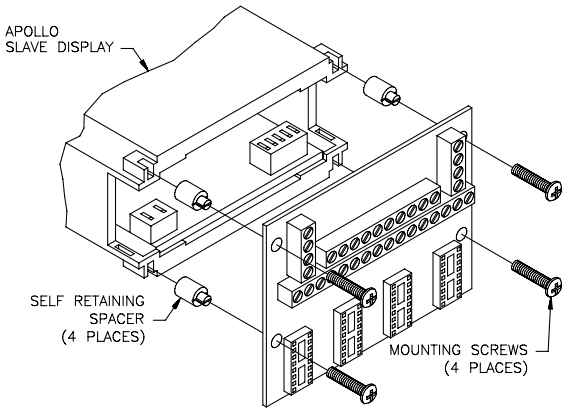

INSTALLATION ENVIRONMENT

The unit should be installed in a location that does not exceed the maximum operating temperature and provides good air circulation. Placing the unit near devices that generate excessive heat should be avoided.

The bezel should be cleaned only with a soft cloth and neutral soap product. Do NOT use solvents. Continuous exposure to direct sunlight may accelerate the aging process of the bezel.

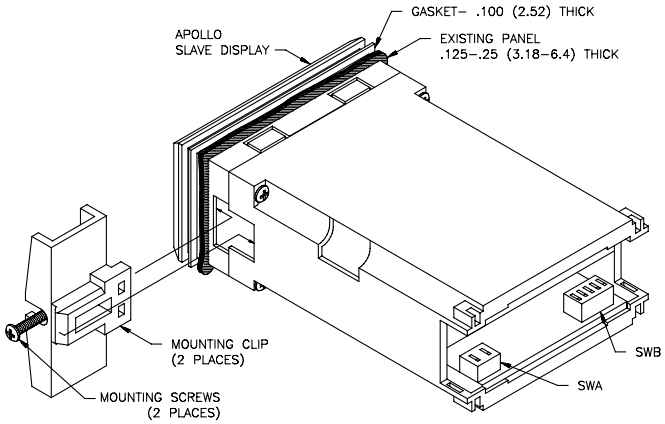

INSTALLATION

The unit meets NEMA 4/IP65 requirements for indoor use, when properly installed. The units are intended to be mounted into an enclosed panel with a gasket to provide a water-tight seal. Two mounting clips and screws are provided for easy installation. Consideration should be given to the thickness of the panel. A panel which is too thin may distort and not provide a water-tight seal. (Recommended minimum panel thickness is 1/8".)

After the panel cut-out has been completed and deburred, slide the panel gasket over the rear of the unit to the back of the bezel. Insert the unit into the panel. As depicted in the drawing, install the screws into the narrow end of the mounting clips. Thread the screws into the clips until the pointed end just protrudes through the other side.

Install each of the mounting clips by inserting the wide lip of the clips into the wide end of the hole, located on either side of the case. Then snap the clip onto the case. Tighten the screws evenly to apply uniform compression, thus providing a water-tight seal. *CAUTION: Only minimum pressure is required to seal panel. Do <u>NOT</u> overtighten screws.*

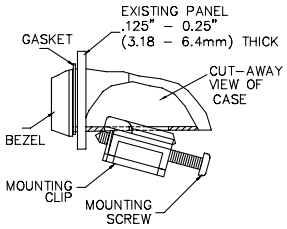

TROUBLESHOOTING

For further technical assistance, contact technical support at the appropriate company numbers listed.

ORDERING INFORMATION

MODEL NO.	DESCRIPTION	PART NUMBER AVAILABLE SUPPLY VOLTAGES	
		5 VDC	10 to 28 VDC
APLSP3	Apollo Slave Display 3-Digit	APLSP3A0	APLSP3B0
APLSP4	Apollo Slave Display 4-Digit	APLSP4A0	APLSP4B0
APLSP5	Apollo Slave Display 5-Digit	APLSP5A0	APLSP5B0
APLSP6	Apollo Slave Display 6-Digit	APLSP6A0	APLSP6B0
ATB1	Accessory Board w/Terminal Block For 16 BCD Data Inputs	ATB10000	
ATB2	Accessory Board w/o Terminal Block For 16 BCD Data Inputs	ATB20000	
ATB3	Accessory Board w/Terminal Block For 24 BCD Data Inputs	ATB30000	
ATB4	Accessory Board w/o Terminal Block For 24 BCD Data Inputs	ATB40000	
ACA1	18" DIP Plug Cable Assembly	ACA10000	
ACE1	Edgecard Connector w/Solder Eyelets 3 & 4-Digit	ACE10000	
ACE4	Edgecard Connector w/Solder Eyelets 5 & 6-Digit	ACE40000	
For more information on Pricing, Enclosures & Panel Mount Kits refer to the RLC Catalog or contact your local RLC Distributor.			

LIMITED WARRANTY

The Company warrants the products it manufactures against defects in materials and workmanship for a period limited to one year from the date of shipment, provided the products have been stored, handled, installed, and used under proper conditions. The Company's liability under this limited warranty shall extend only to the repair or replacement of a defective product, at The Company's option. The Company disclaims all liability for any affirmation, promise or representation with respect to the products.

The customer agrees to hold Red Lion Controls harmless from, defend, and indemnify RLC against damages, claims, and expenses arising out of subsequent sales of RLC products or products containing components manufactured by RLC and based upon personal injuries, deaths, property damage, lost profits, and other matters which Buyer, its employees, or sub-contractors are or may be to any extent liable, including without limitation penalties imposed by the Consumer Product Safety Act (P.L. 92-573) and liability imposed upon any person pursuant to the Magnuson-Moss Warranty Act (P.L. 93-637), as now in effect or as amended hereafter.

No warranties expressed or implied are created with respect to The Company's products except those expressly contained herein. The Customer acknowledges the disclaimers and limitations contained herein and relies on no other warranties or affirmations.

Red Lion Controls
20 Willow Springs Circle
York PA 17402
Tel +1 (717) 767-6511
Fax +1 (717) 764-0839

Red Lion Controls BV
Basicweg 11b
NL - 3821 BR Amersfoort
Tel +31 (0) 334 723 225
Fax +31 (0) 334 893 793

Red Lion Controls Asia
31, Kaki Bukit Road 3 #06-04/05 TechLink
Singapore 417818
Tel +65 6744-6613
Fax +65 6743-3360